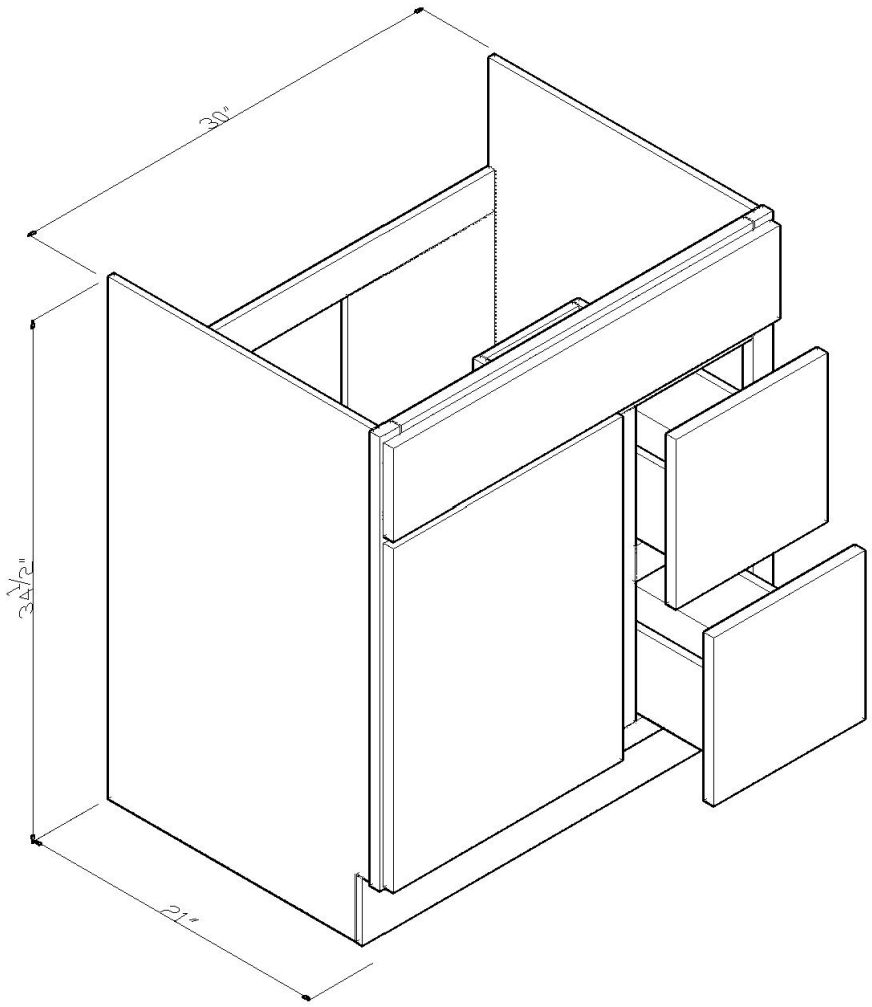

V3021D