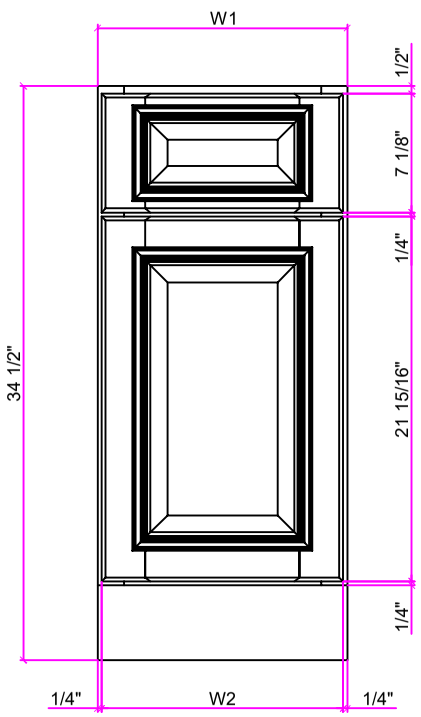

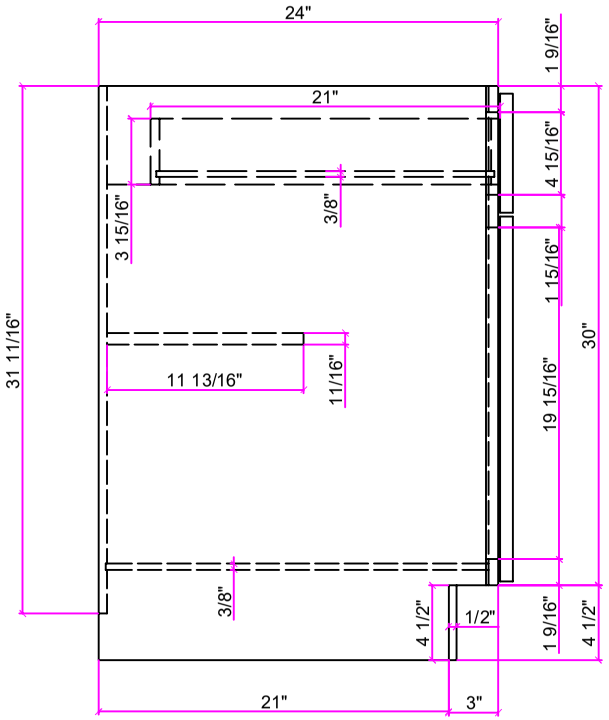

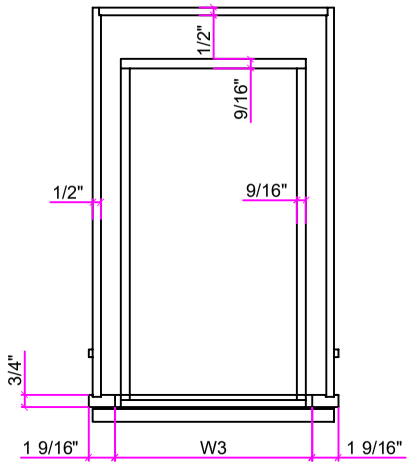

REVISIONS

BDM & TWM

DRAWN BY:
CHARLES WANG

DATE: 3.11.2016

SCALE: 1/4" = 1'-0"

SHEET: 8.5" X 11"

B12-B21