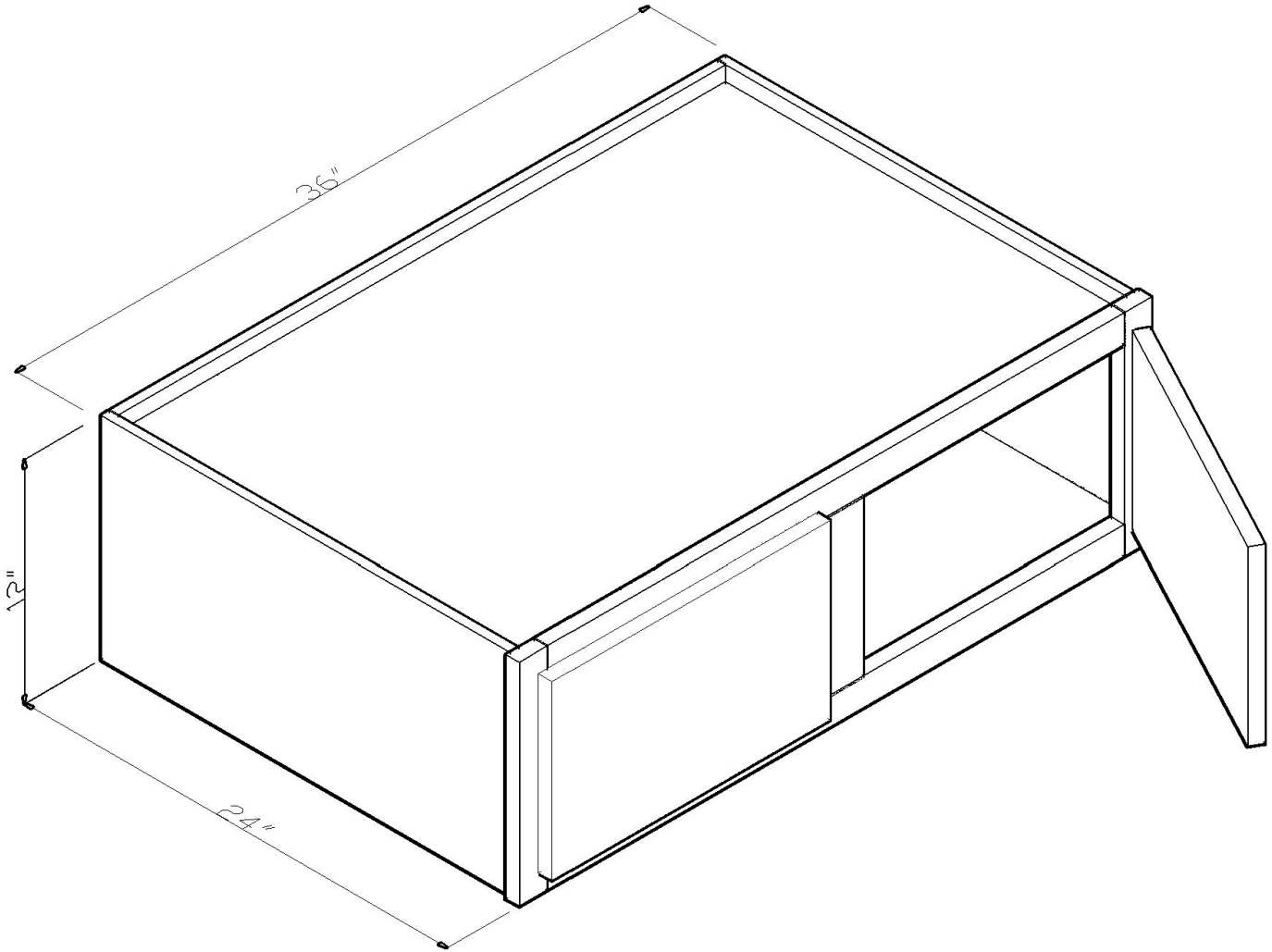

W361224