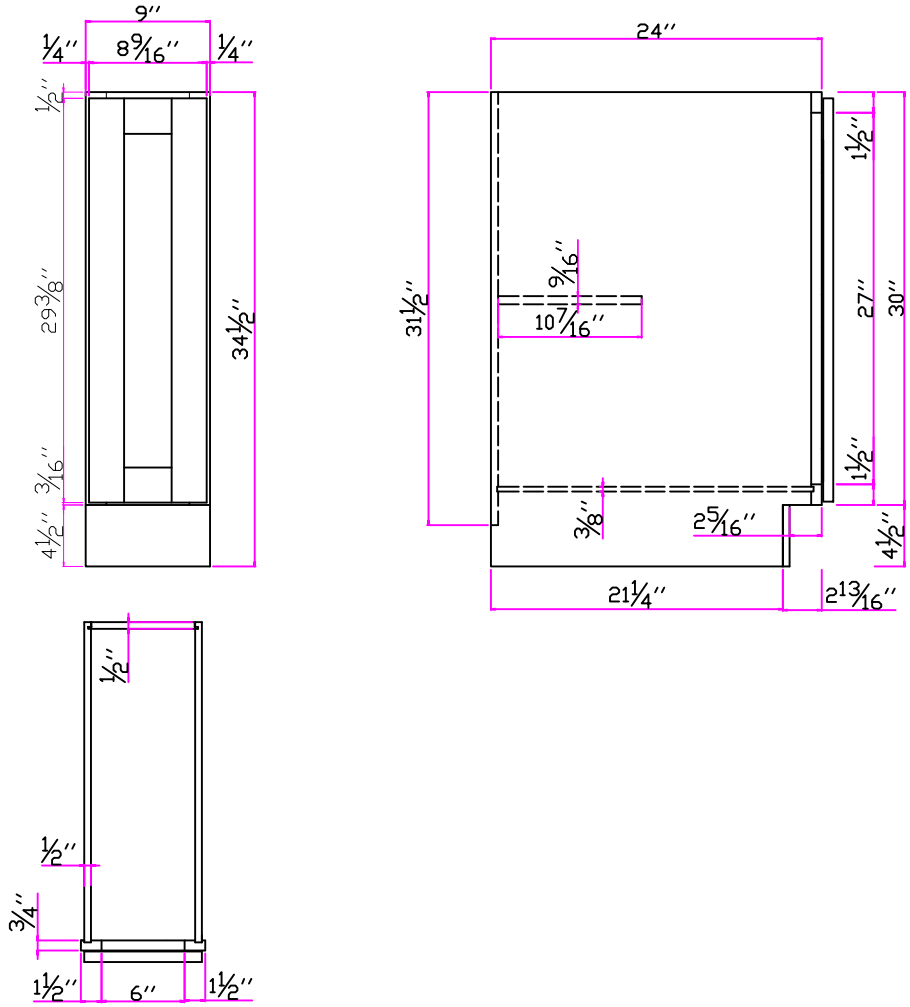

REVISIONS

GHI Custom Cabinetry

ACW

B09-FH

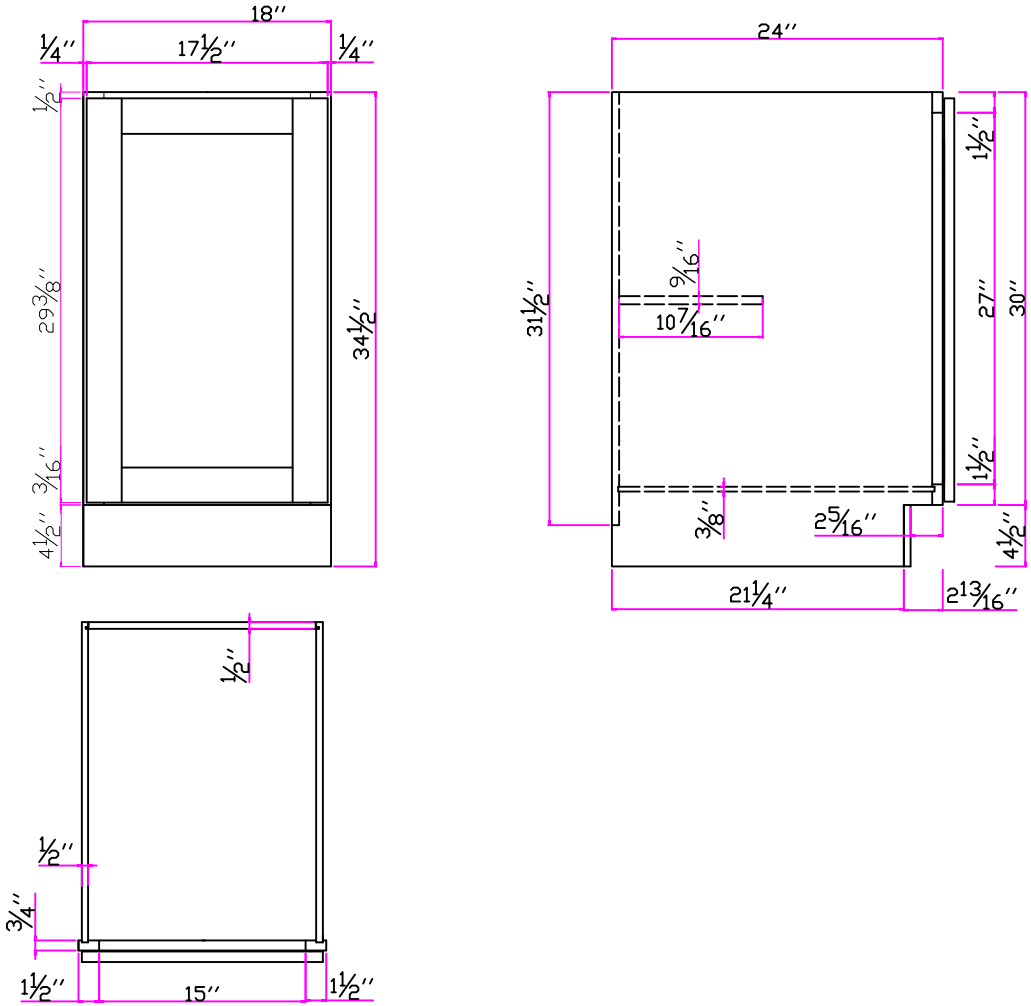

REVISIONS

GHI Custom Cabinetry

ACW

B18-FH

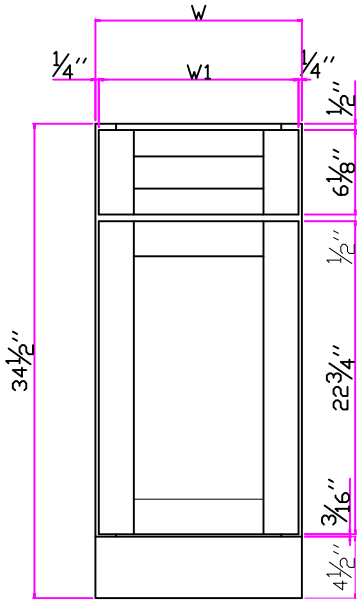

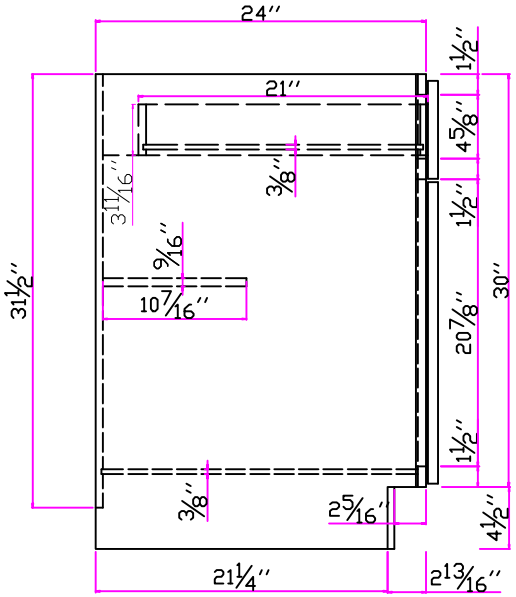

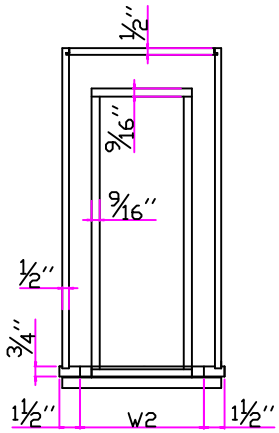

REVISIONS

GHI Custom Cabinetry

ACW

B12-B21

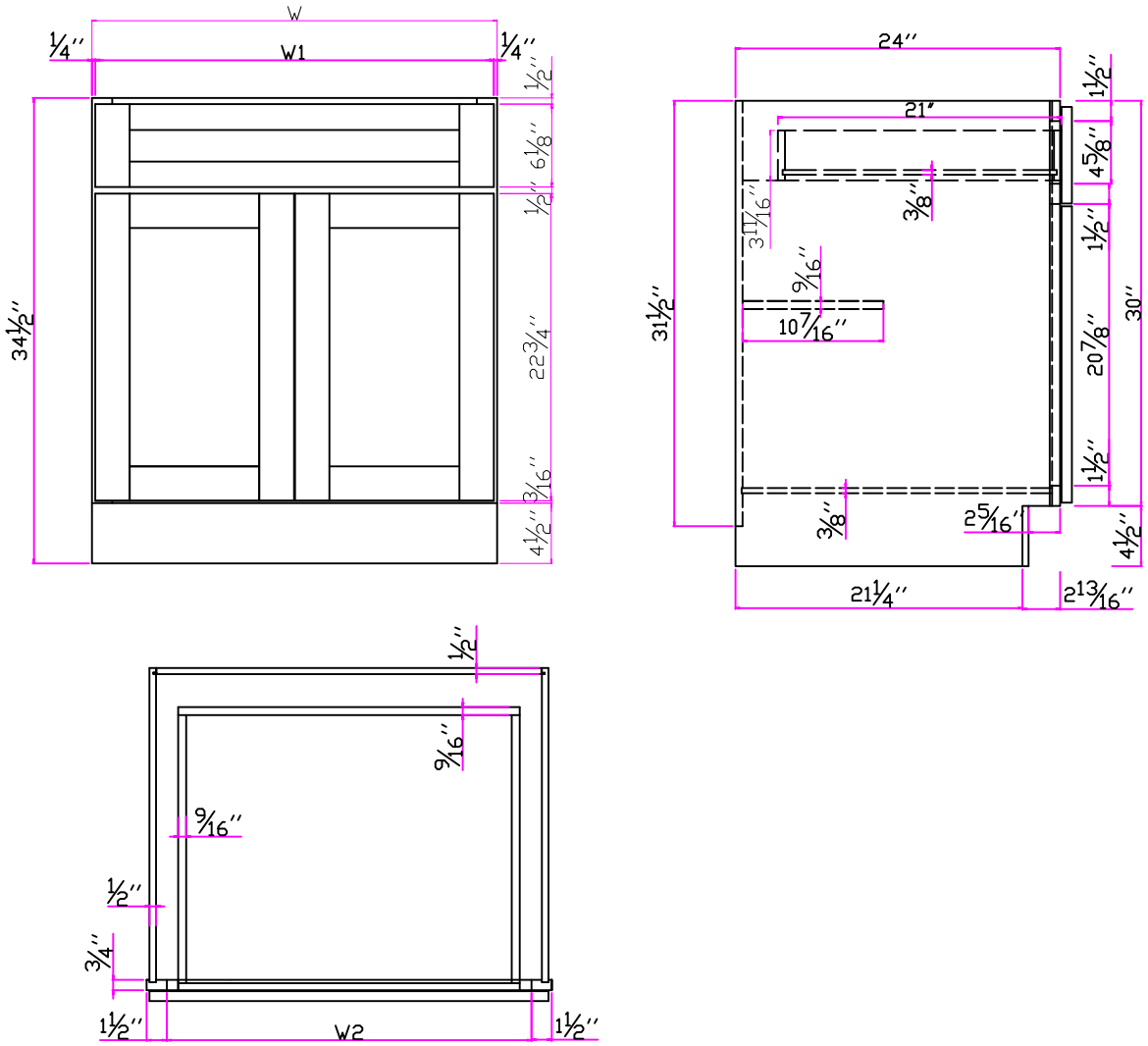

REVISIONS

GHI Custom Cabinetry

ACW

B24-B30

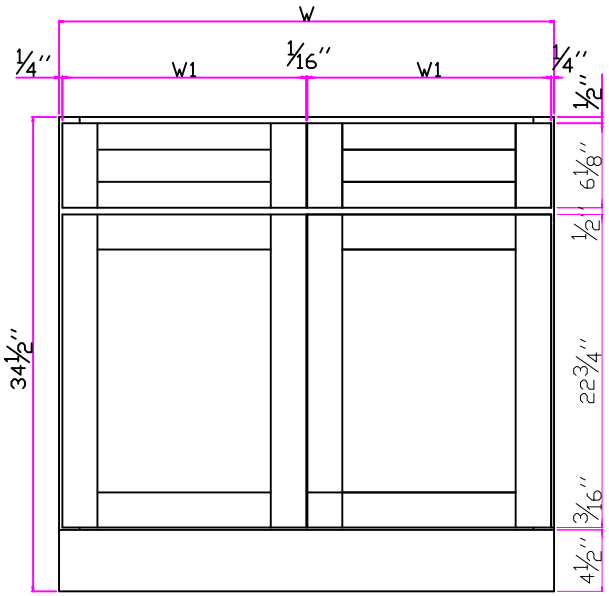

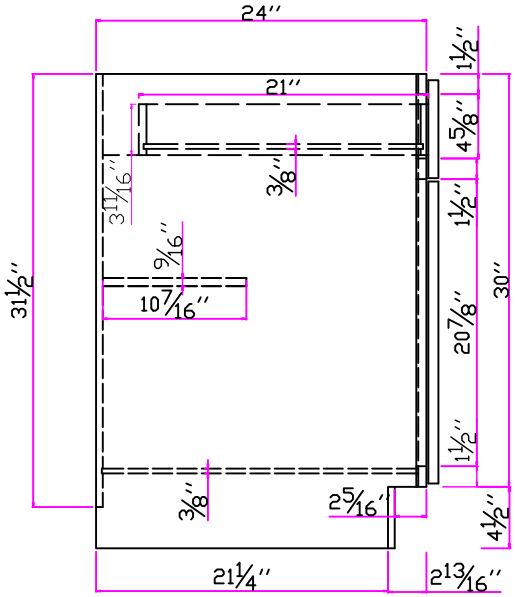

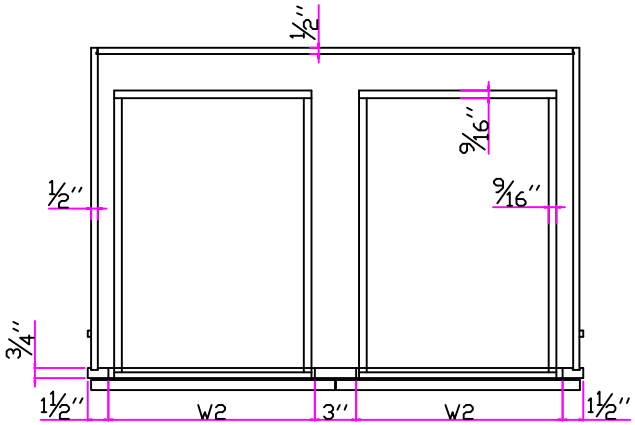

REVISIONS

GHI Custom Cabinetry

ACW

B33-B36

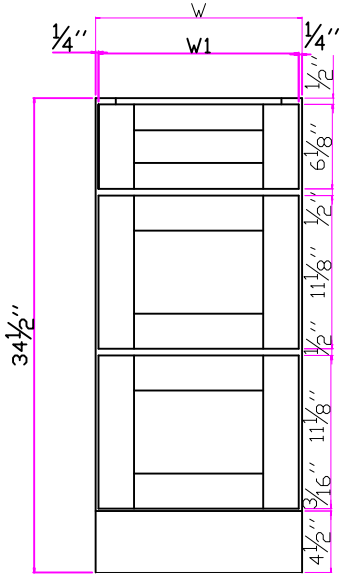

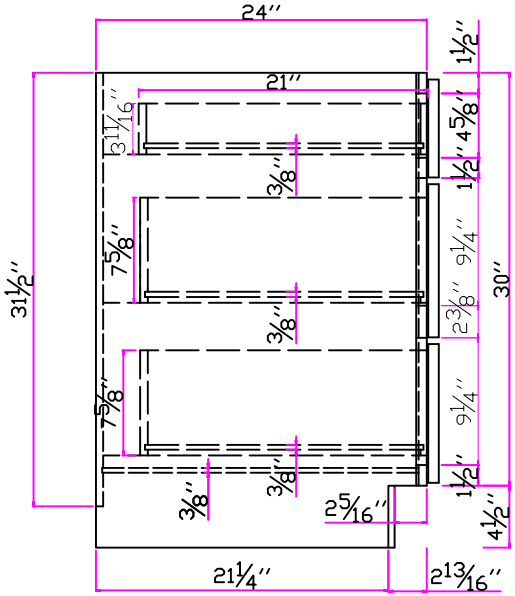

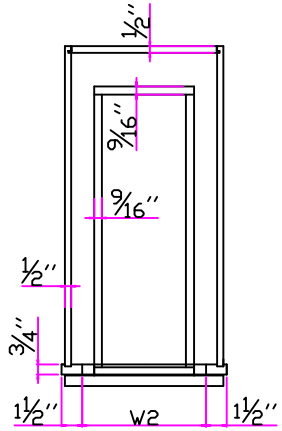

REVISIONS

GHI Custom Cabinetry

ACW

DB15-DB30

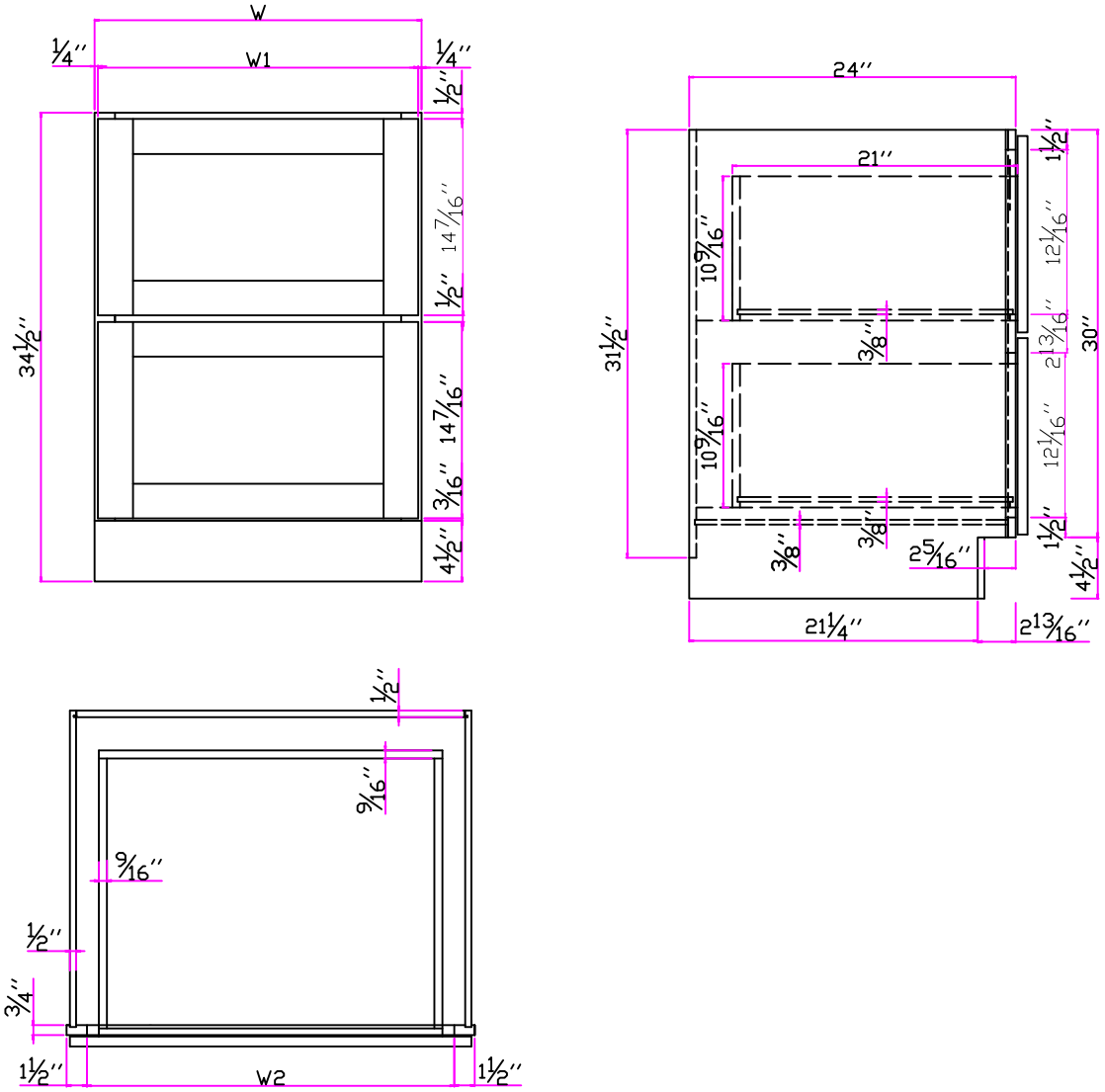

REVISIONS

GHI Custom Cabinetry

ACW

DB24-2
DB30-2

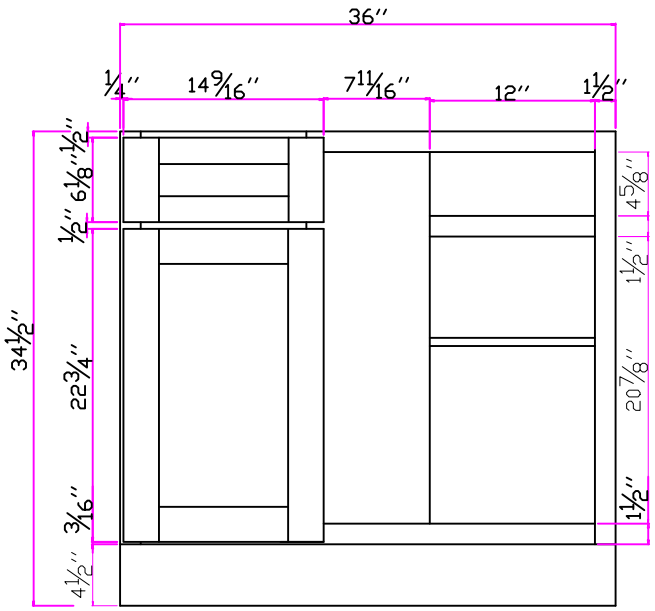

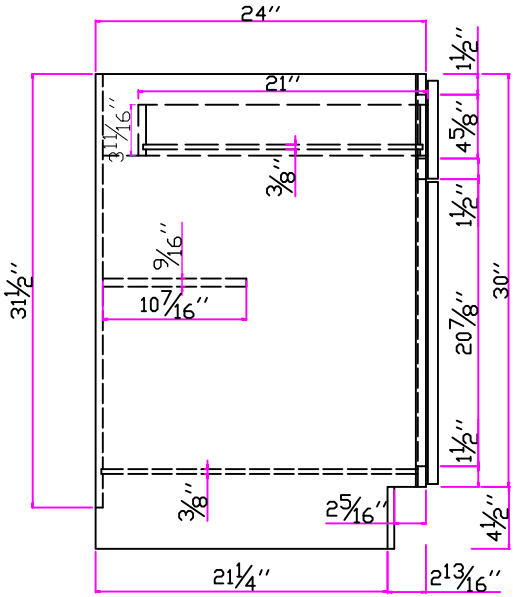

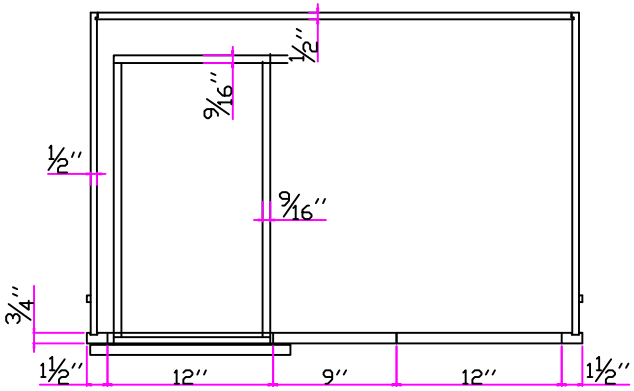

REVISIONS

GHI Custom Cabinetry

ACW

BBC42-45

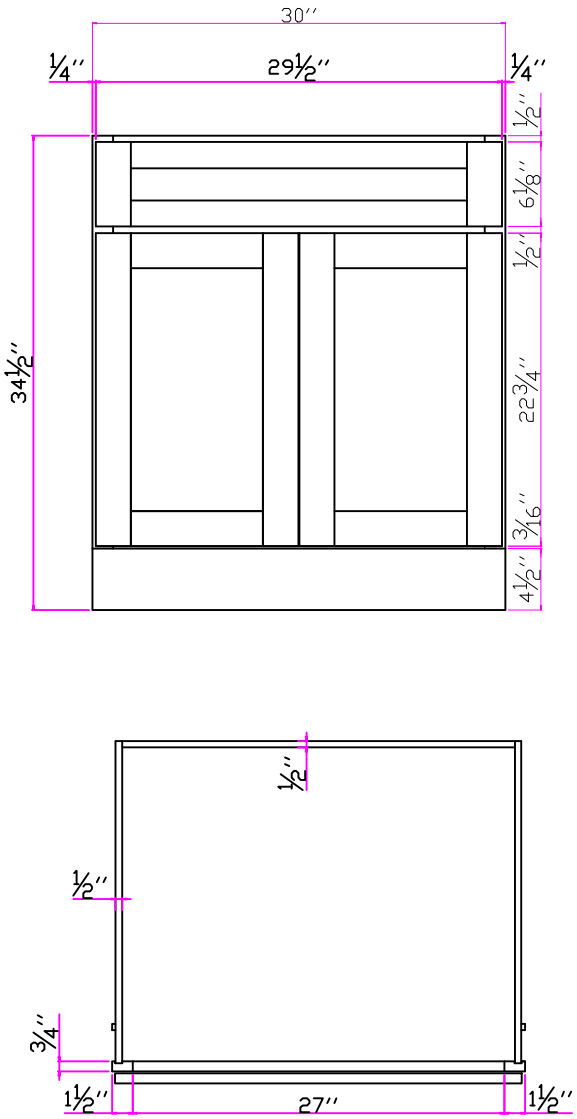

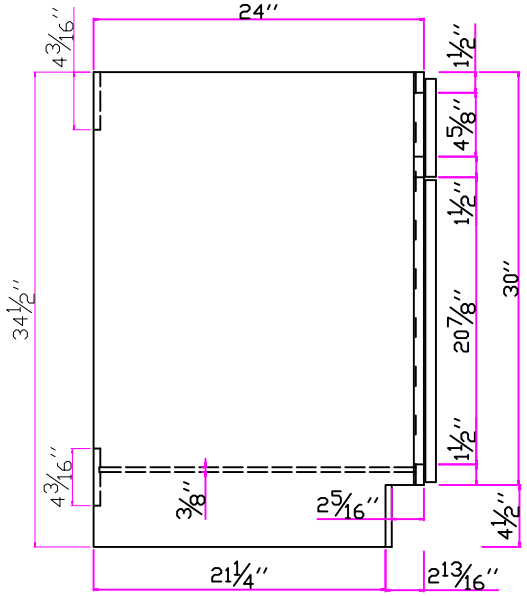

REVISIONS

GHI Custom Cabinetry

ACW

SB30

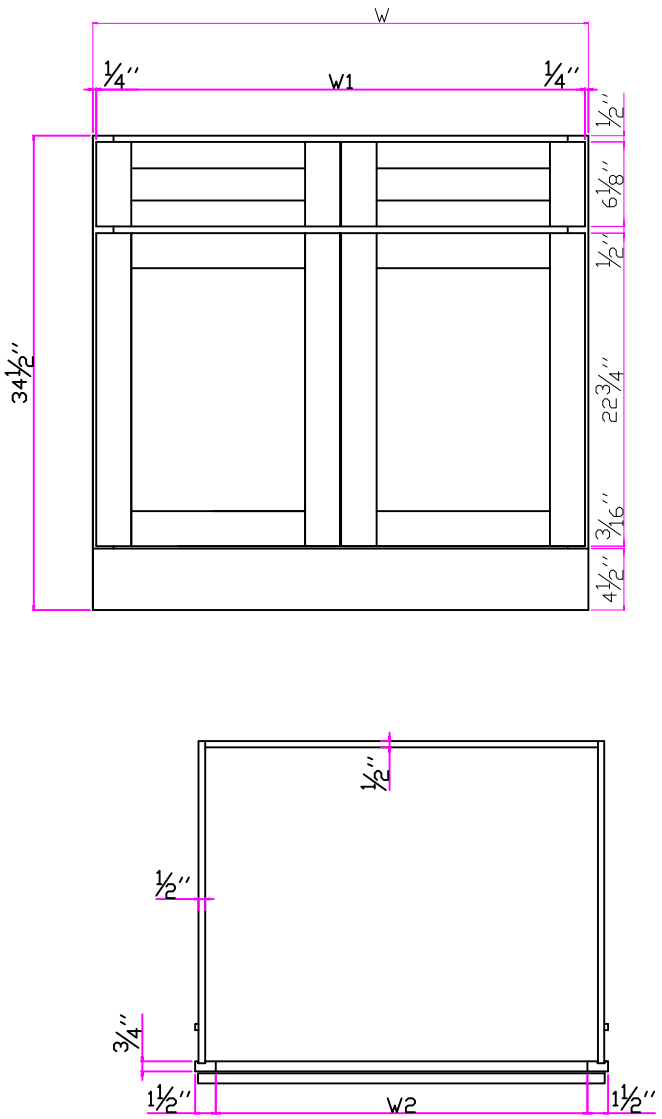

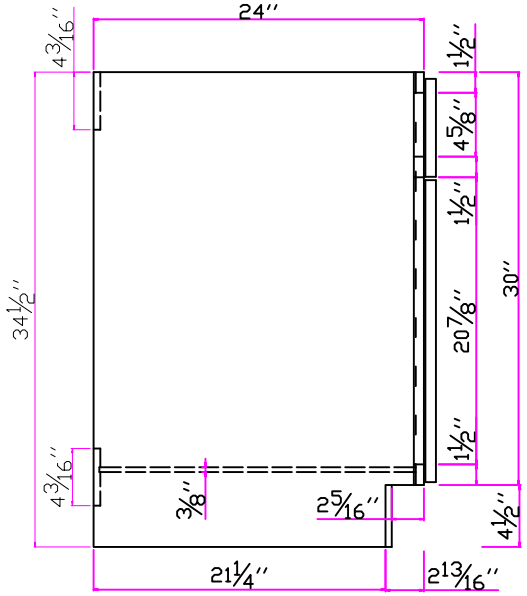

REVISIONS

GHI Custom Cabinetry

ACW

SB33-SB42

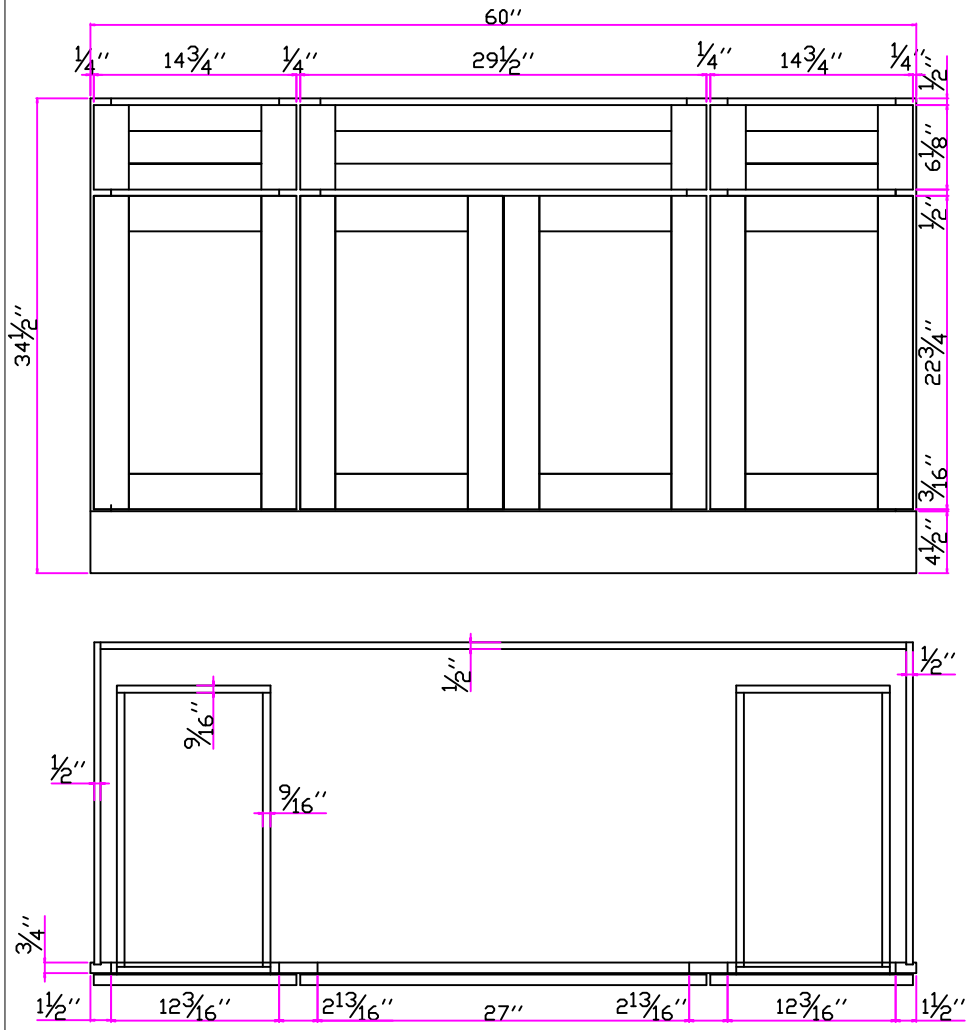

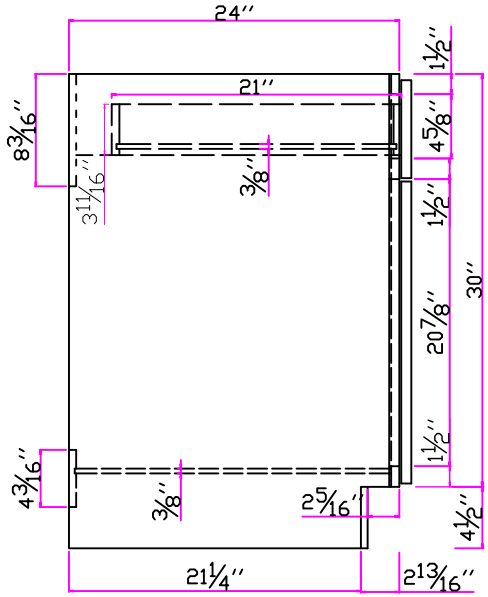

REVISIONS

GHI Custom Cabinetry

ACW

SB60

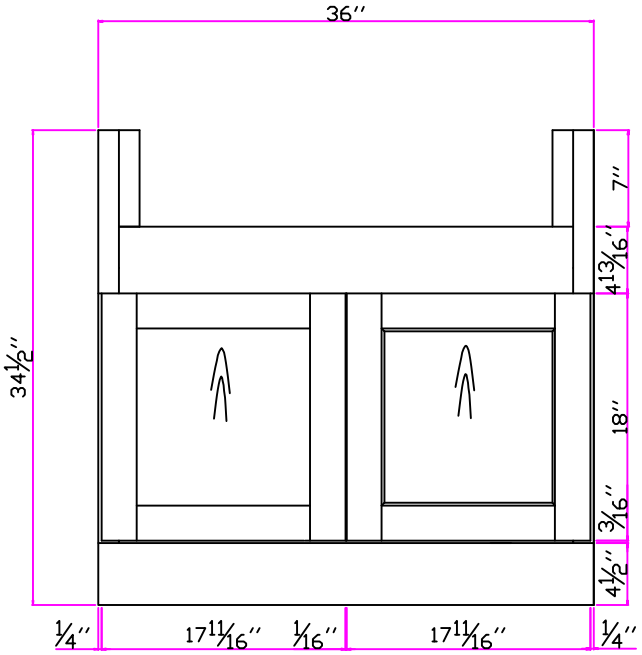

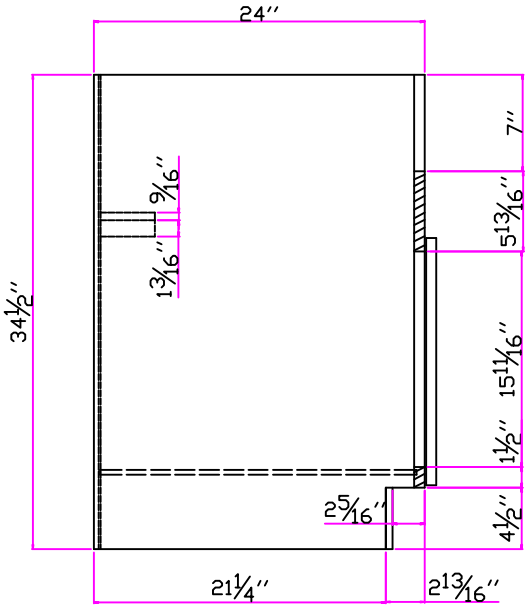

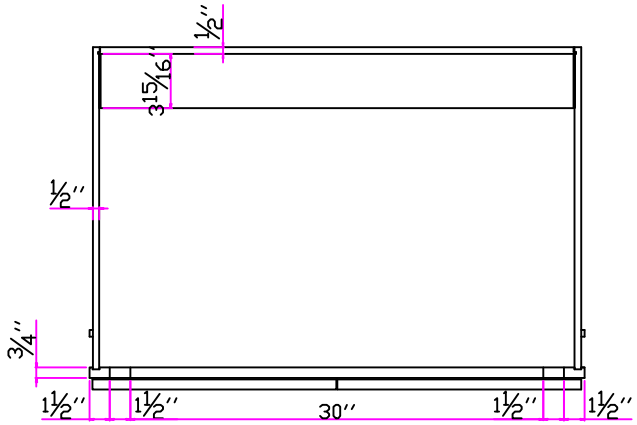

REVISIONS

GHI Custom Cabinetry

ACW

FSB36

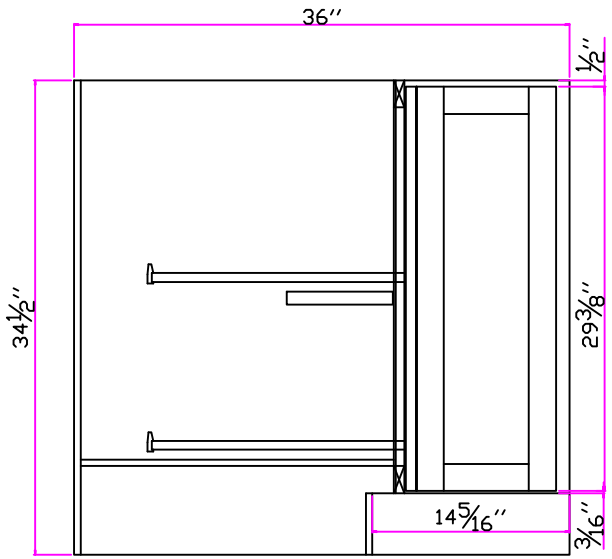

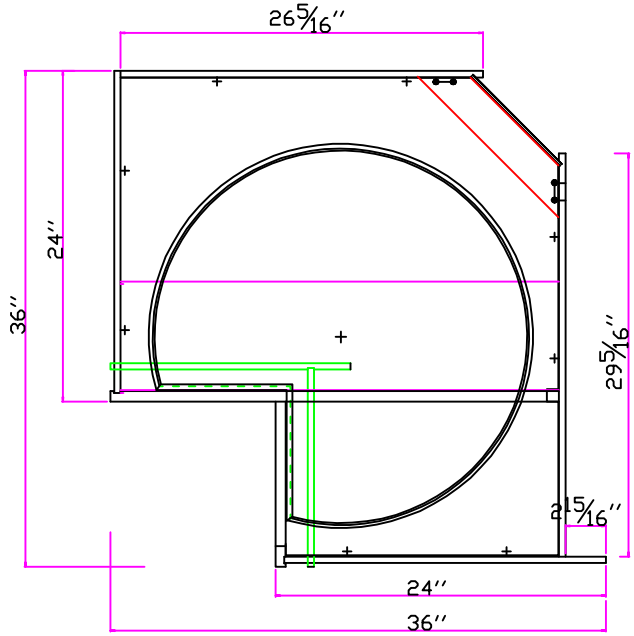

REVISIONS

GHI Custom Cabinetry

ACW

DCB3612

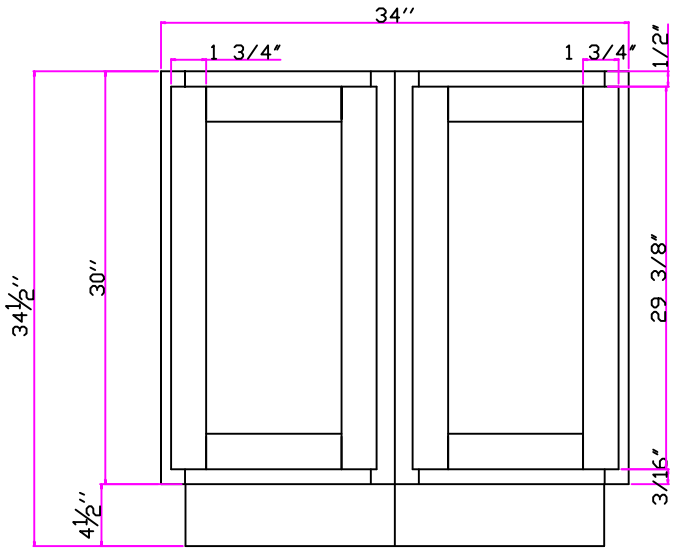

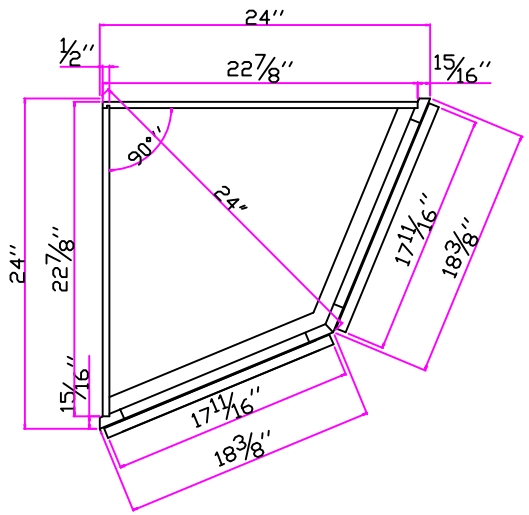

REVISIONS

GHI Custom Cabinetry

ACW

BC24

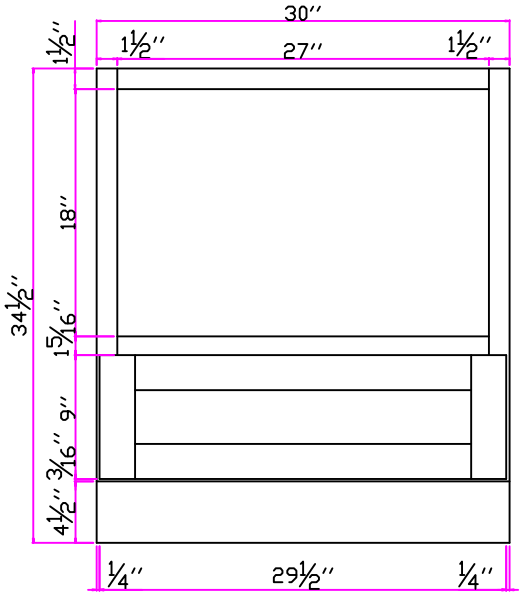

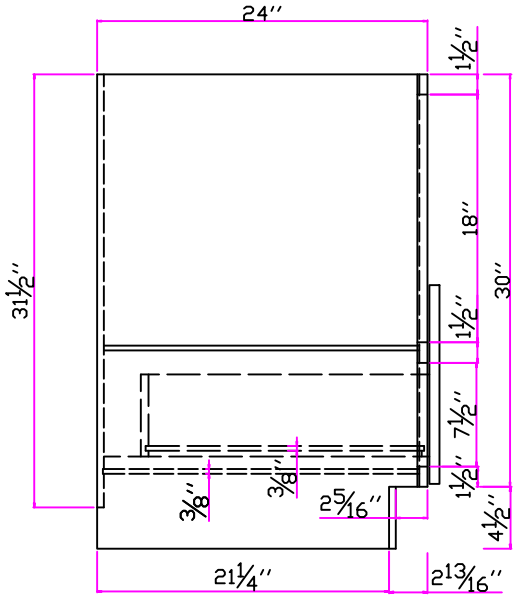

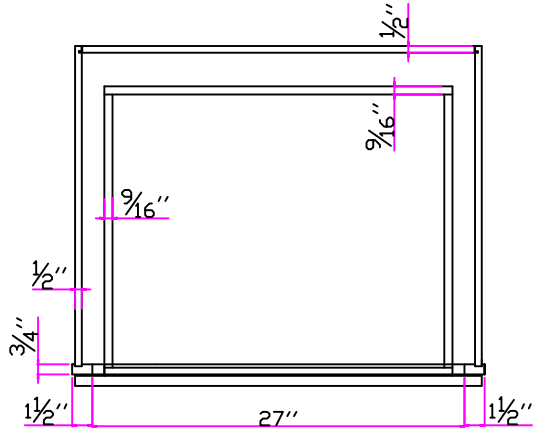

REVISIONS

GHI Custom Cabinetry

ACW

MB30

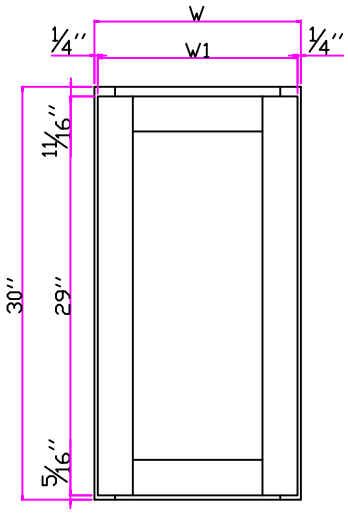

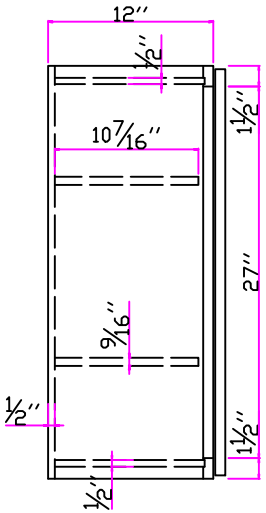

REVISIONS

GHI Custom Cabinetry

ACW

W0930-W2130

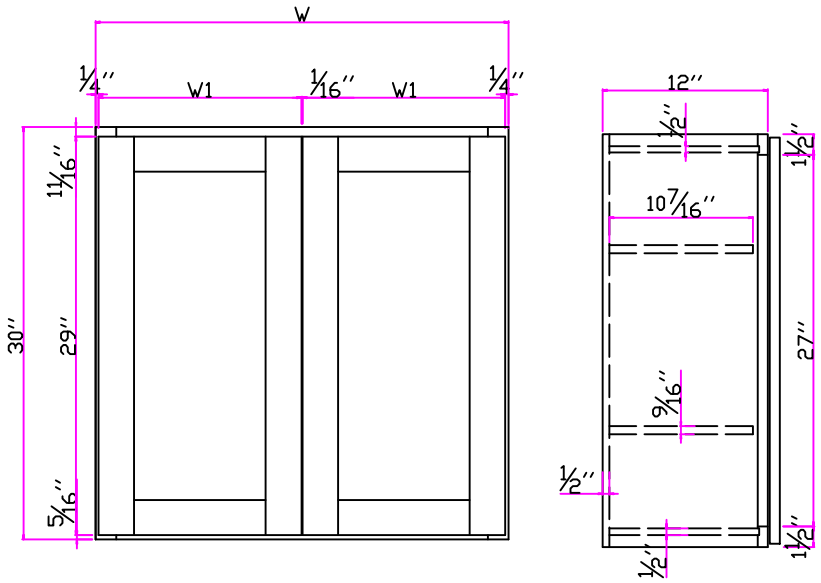

REVISIONS

GHI Custom Cabinetry

ACW

W2430-W3630

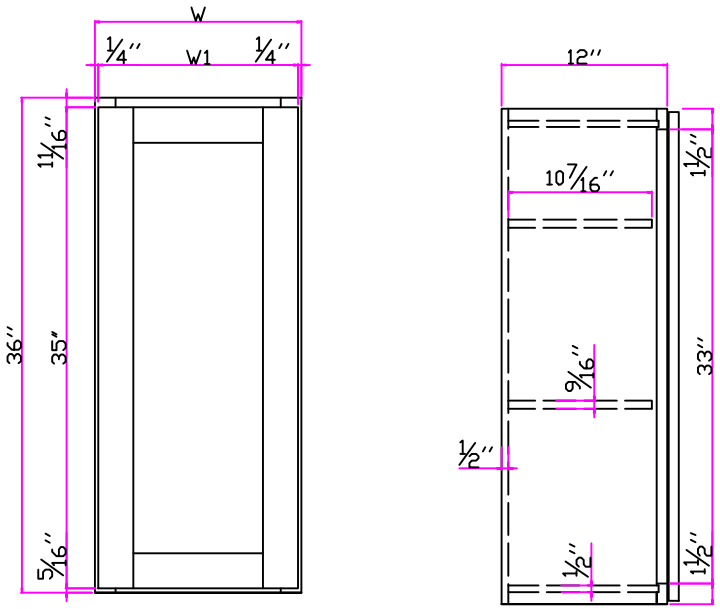

REVISIONS

GHI Custom Cabinetry

ACW

W0936-2136

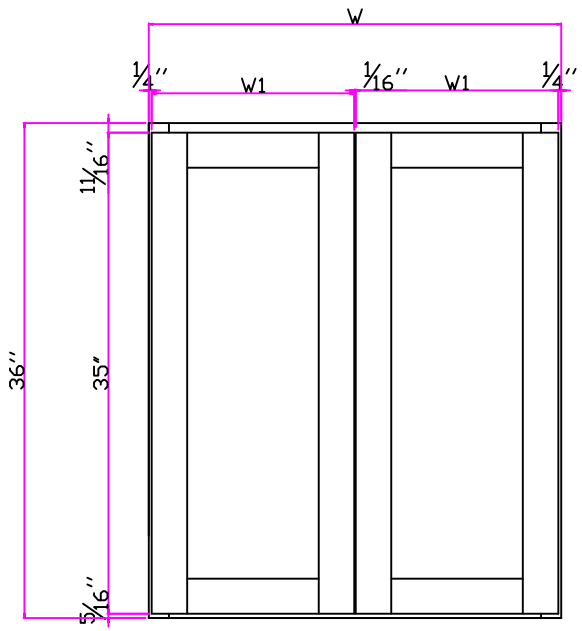

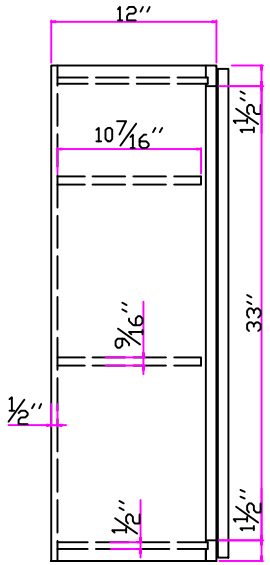

REVISIONS

GHI Custom Cabinetry

ACW

W2436-W3636

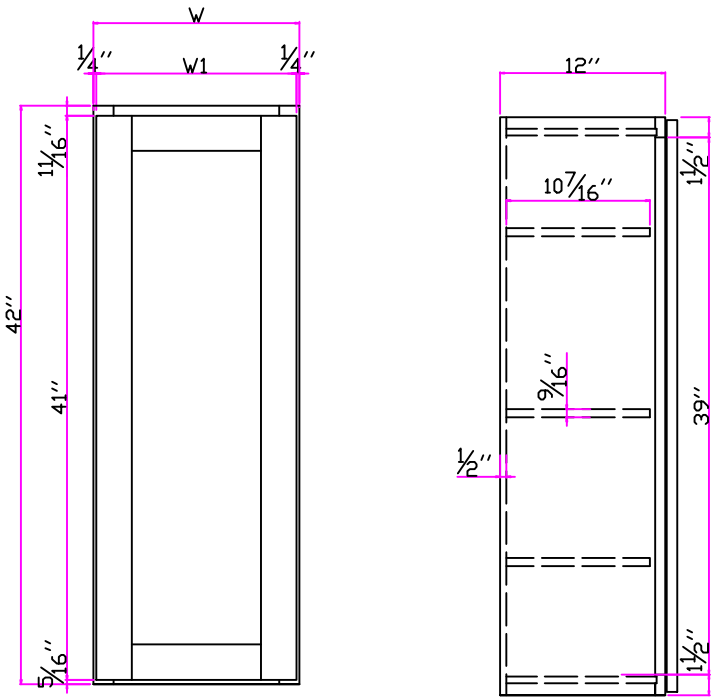

REVISIONS

GHI Custom Cabinetry

ACW

W0942-W2142

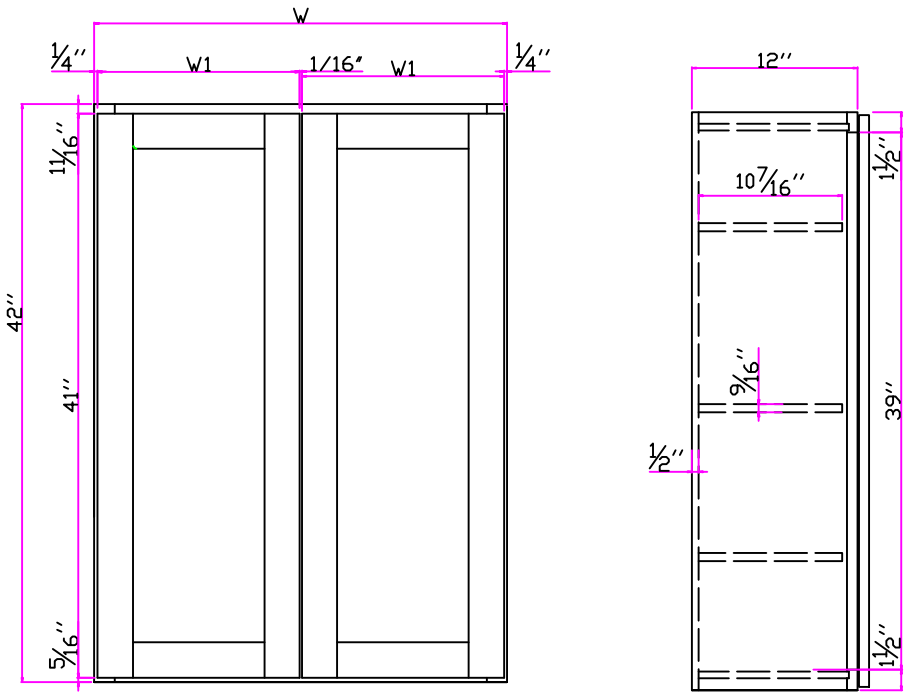

REVISIONS

GHI Custom Cabinetry

ACW

W2442-W3642

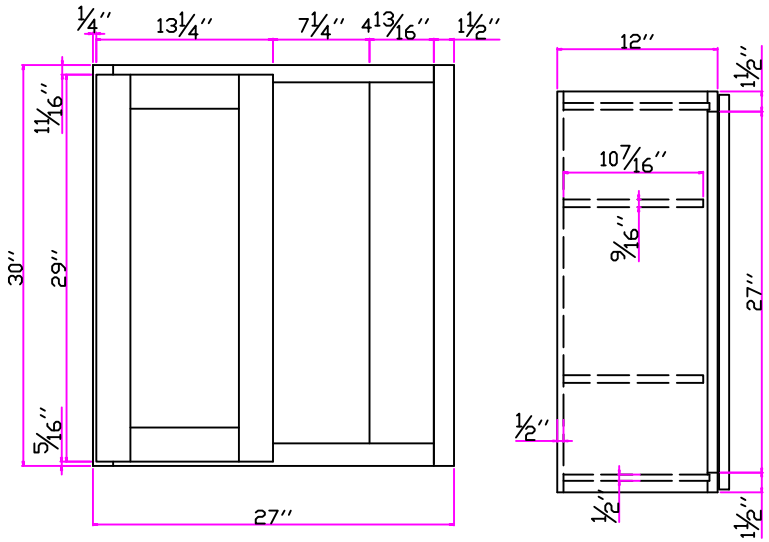

REVISIONS

GHI Custom Cabinetry

ACW

WBC2730

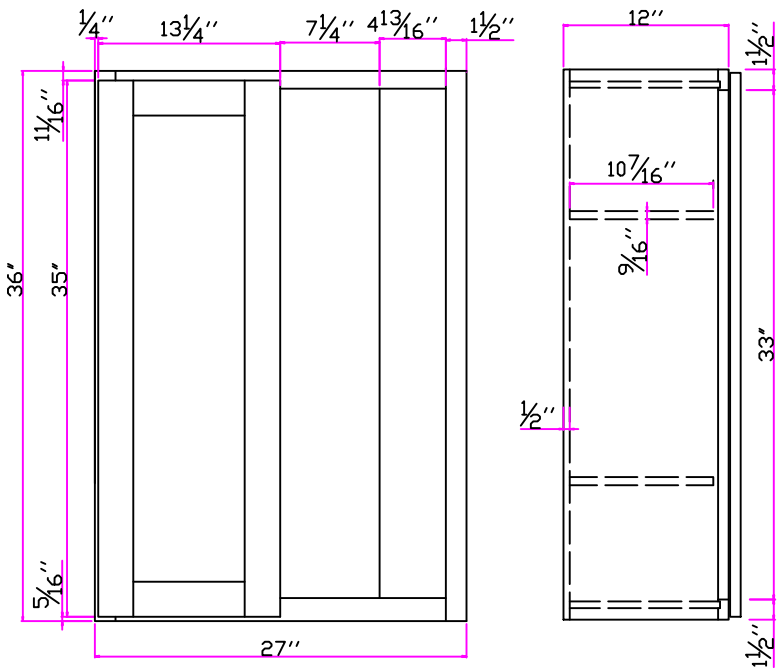

REVISIONS

GHI Custom Cabinetry

ACW

WBC2736

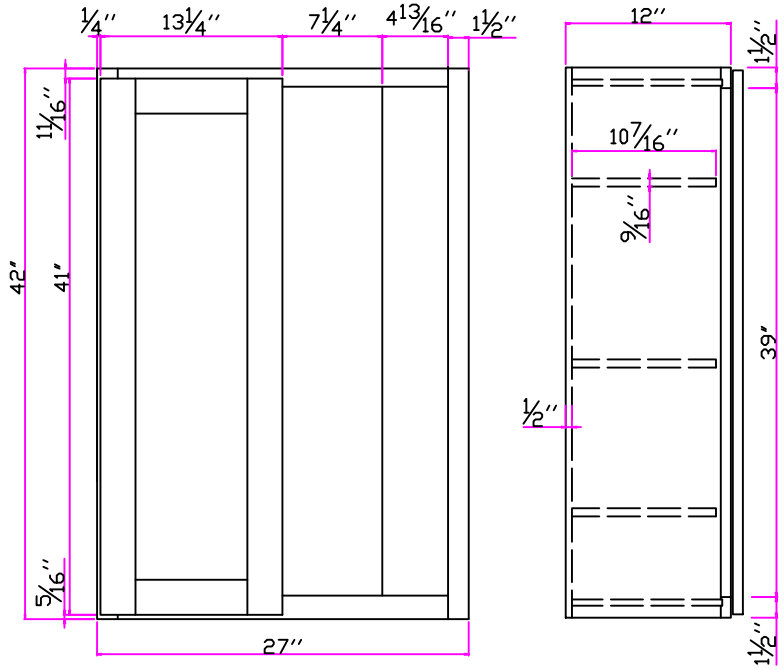

REVISIONS

GHI Custom Cabinetry

ACW

WBC2742

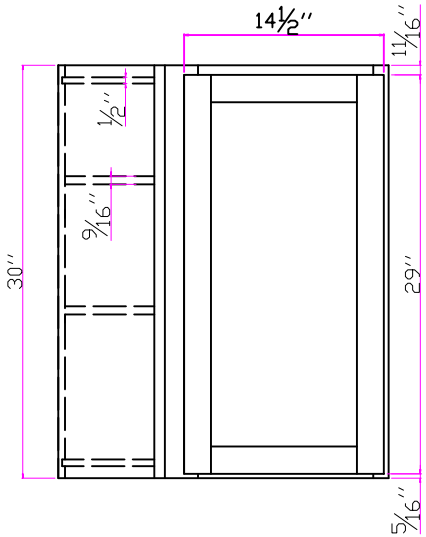

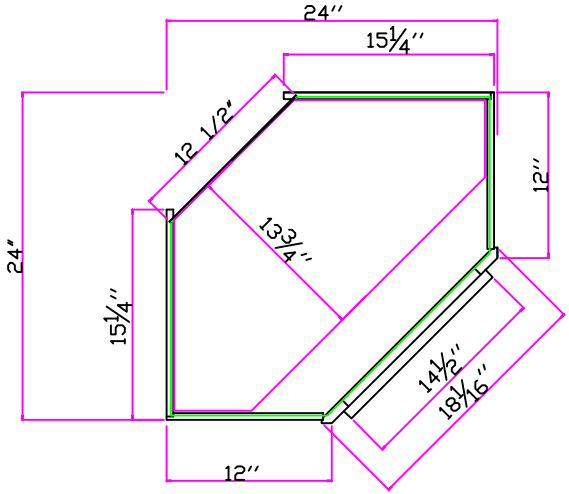

REVISIONS

GHI Custom Cabinetry

ACW

WDC2430

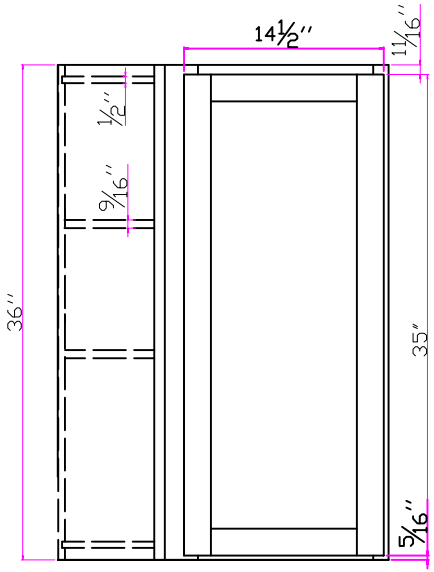

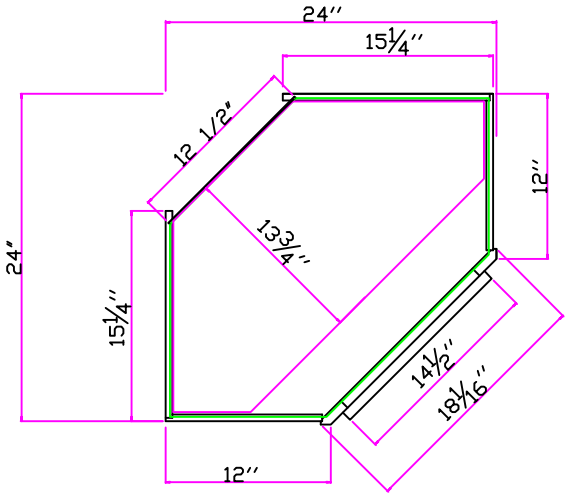

REVISIONS

GHI Custom Cabinetry

ACW

WDC2436

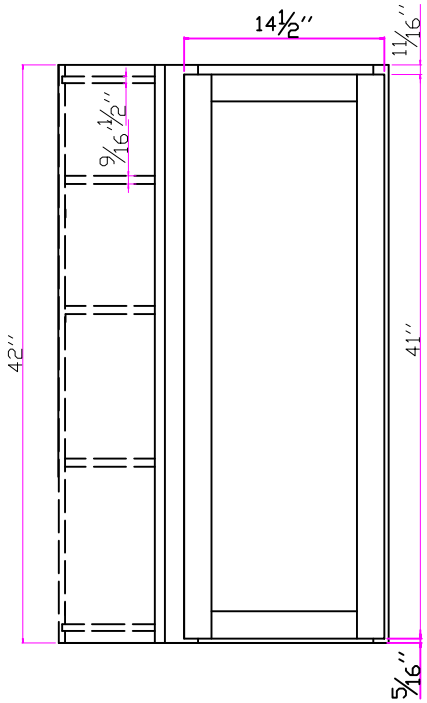

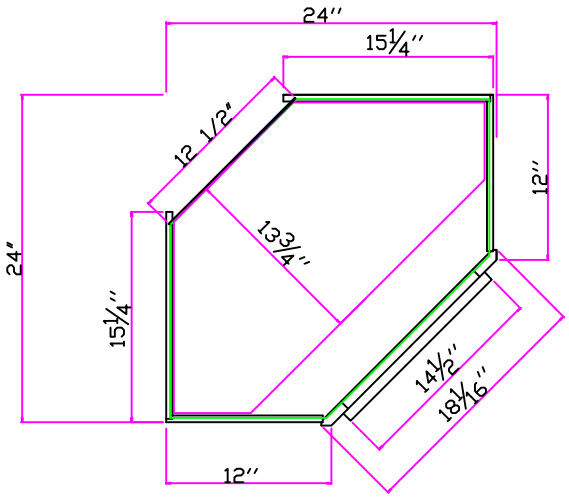

REVISIONS

GHI Custom Cabinetry

ACW

WDC2442

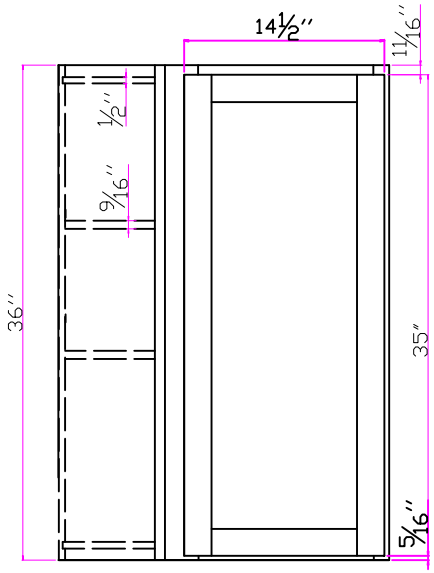

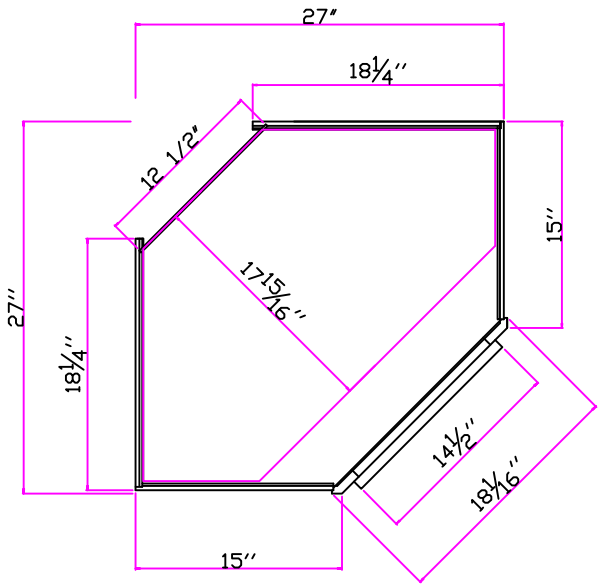

REVISIONS

GHI Custom Cabinetry

ACW

WDC2736

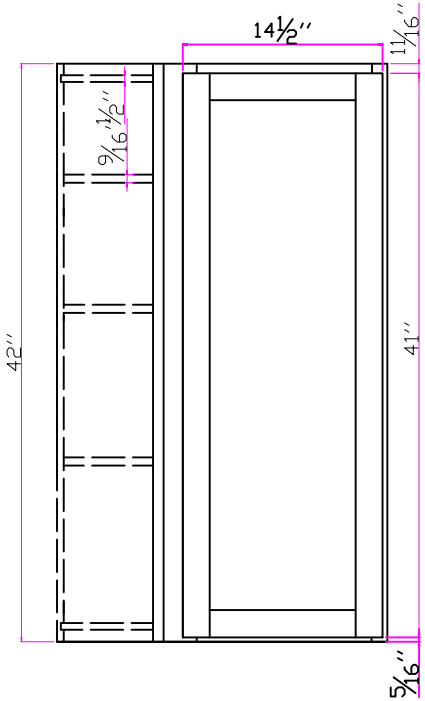

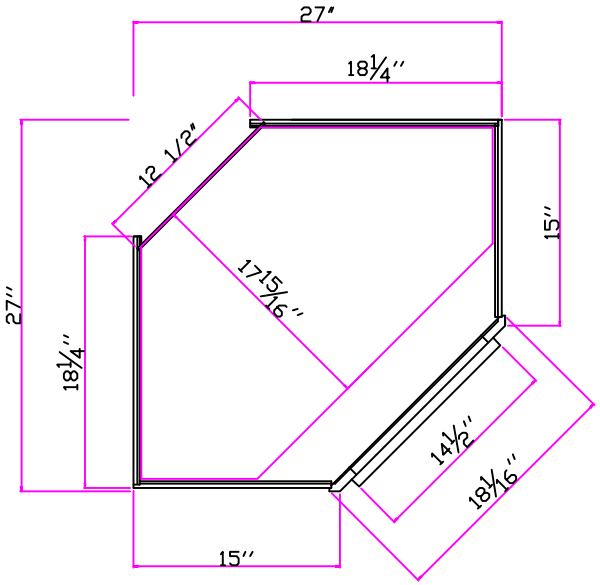

REVISIONS

GHI Custom Cabinetry

ACW

WDC2742

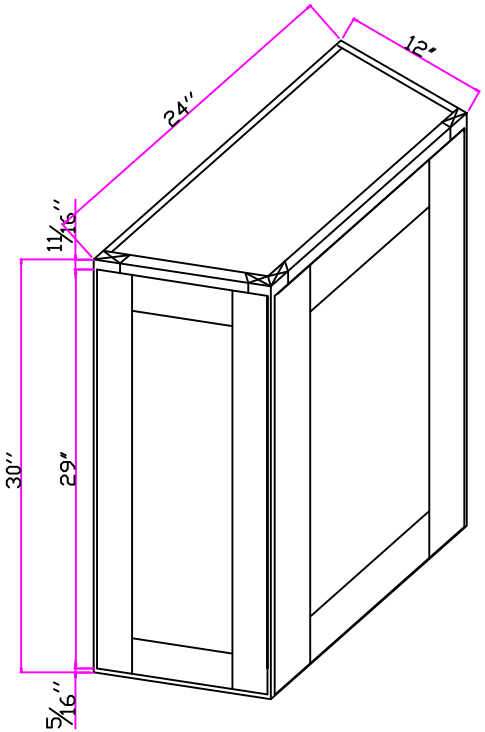

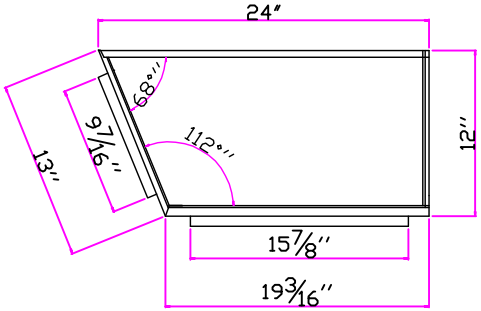

REVISIONS

GHI Custom Cabinetry

ACW

WAC2430

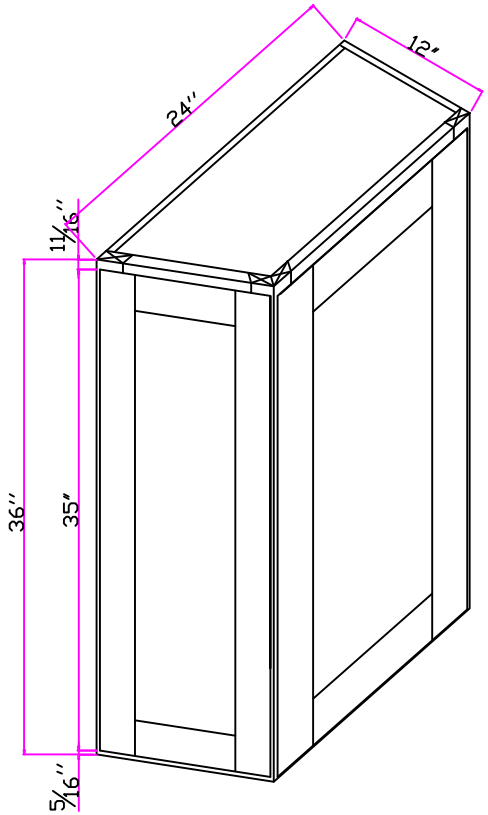

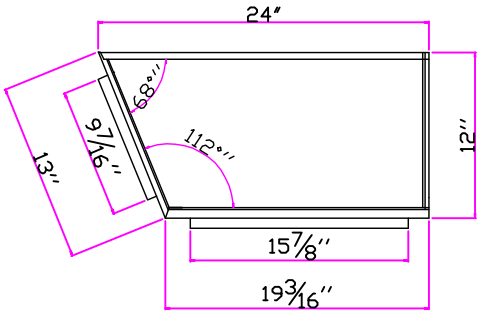

REVISIONS

GHI Custom Cabinetry

ACW

WAC2436

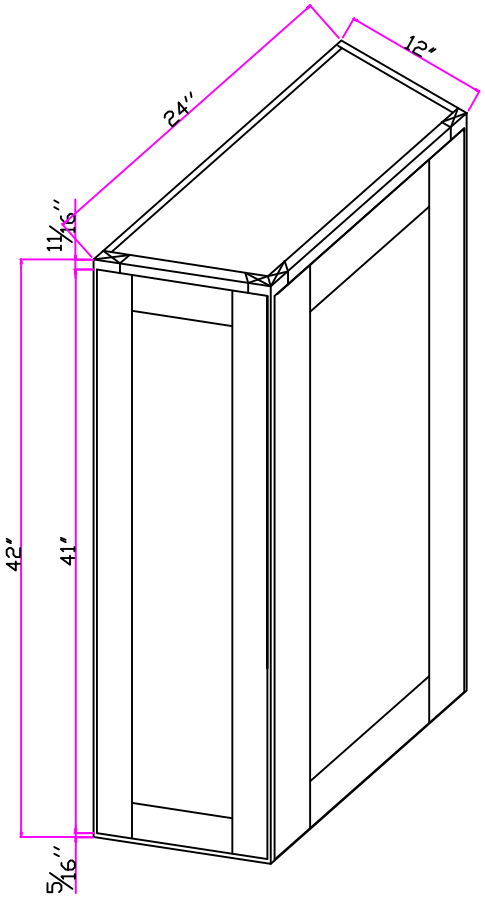

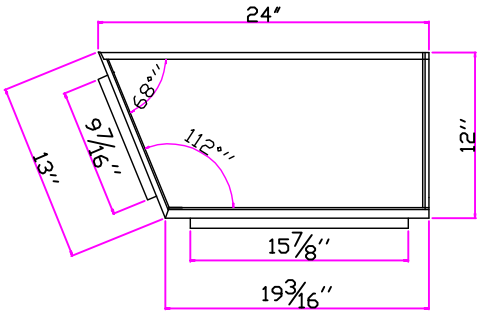

REVISIONS

GHI Custom Cabinetry

ACW

WAC2442

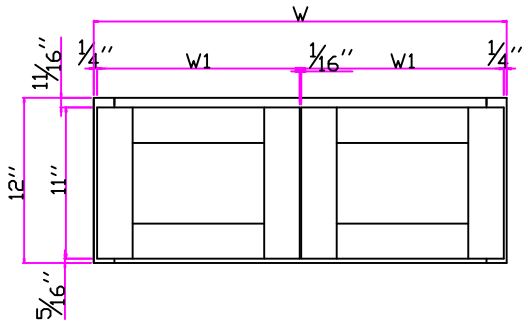

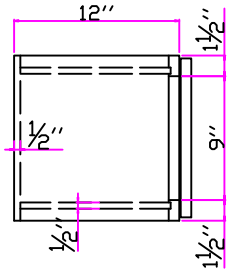

REVISIONS

GHI Custom Cabinetry

ACW

W3012-W3612

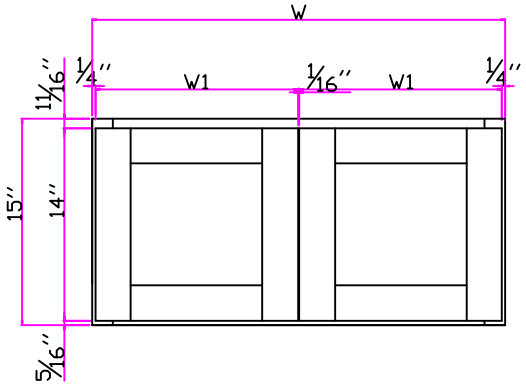

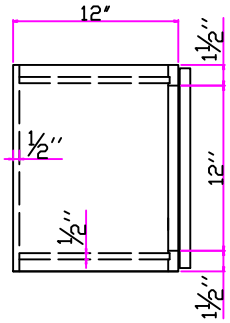

REVISIONS

GHI Custom Cabinetry

ACW

W2415-W3615

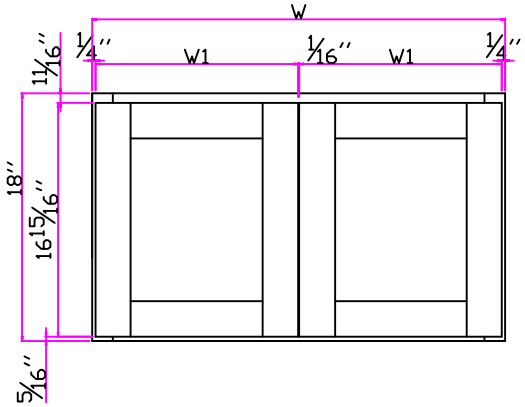

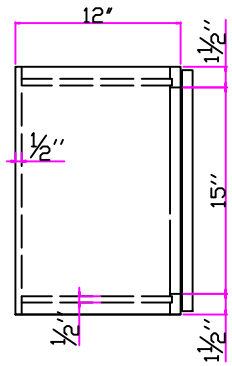

REVISIONS

GHI Custom Cabinetry

ACW

W3018-W3618

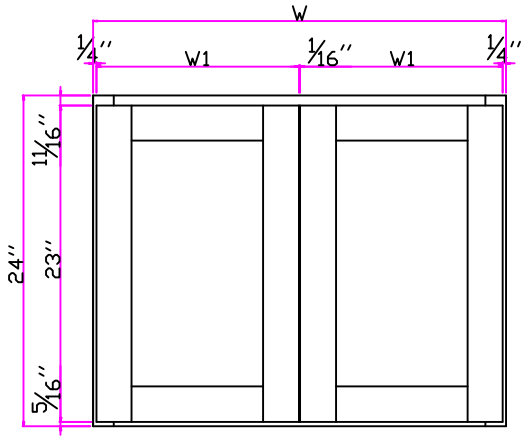

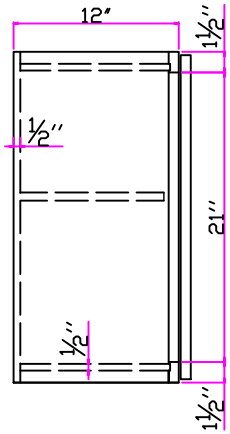

REVISIONS

GHI Custom Cabinetry

ACW

W3024-W3624

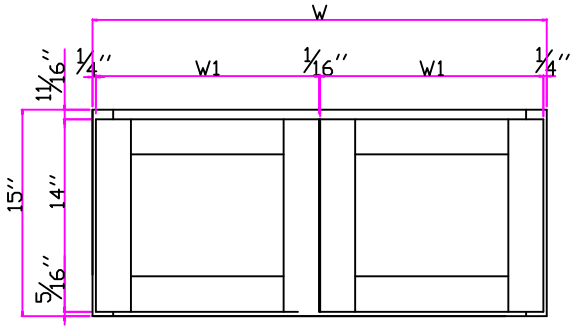

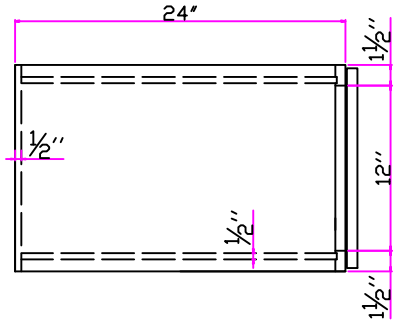

REVISIONS

GHI Custom Cabinetry

ACW

W331524
W361524

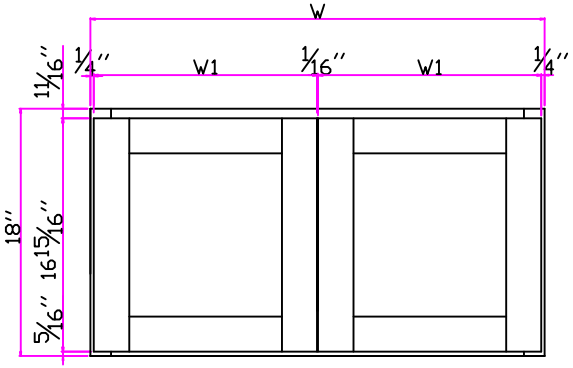

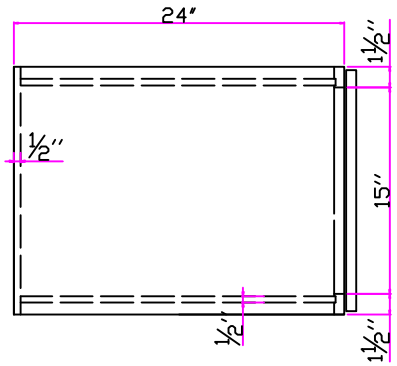

REVISIONS

GHI Custom Cabinetry

ACW

W331824
W361824

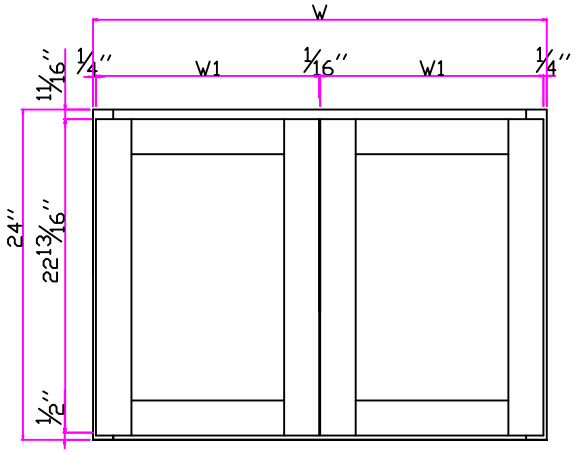

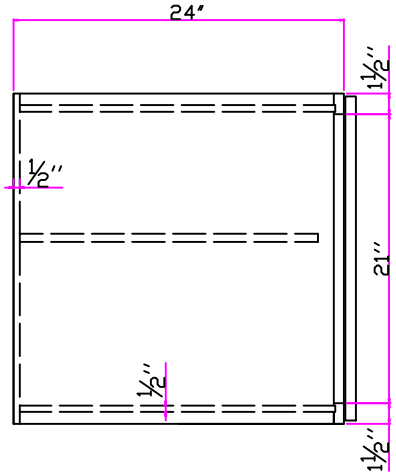

REVISIONS

GHI Custom Cabinetry

ACW

W332424
W362424

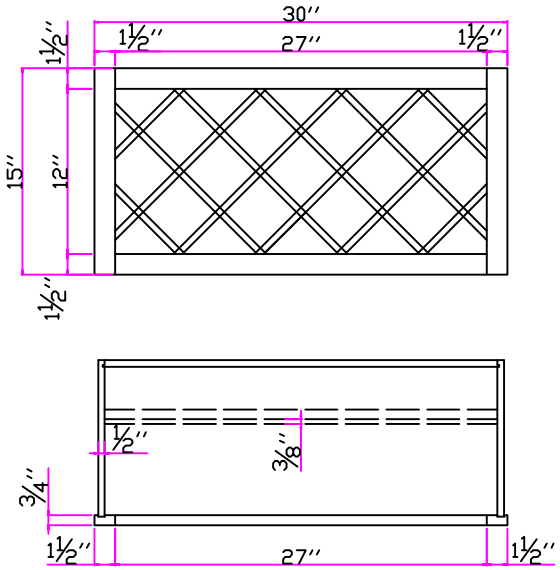

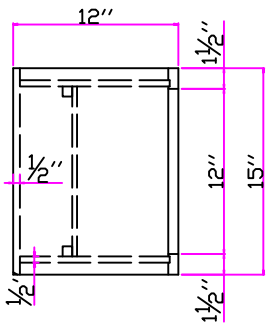

REVISIONS

GHI Custom Cabinetry

ACW

WR3015

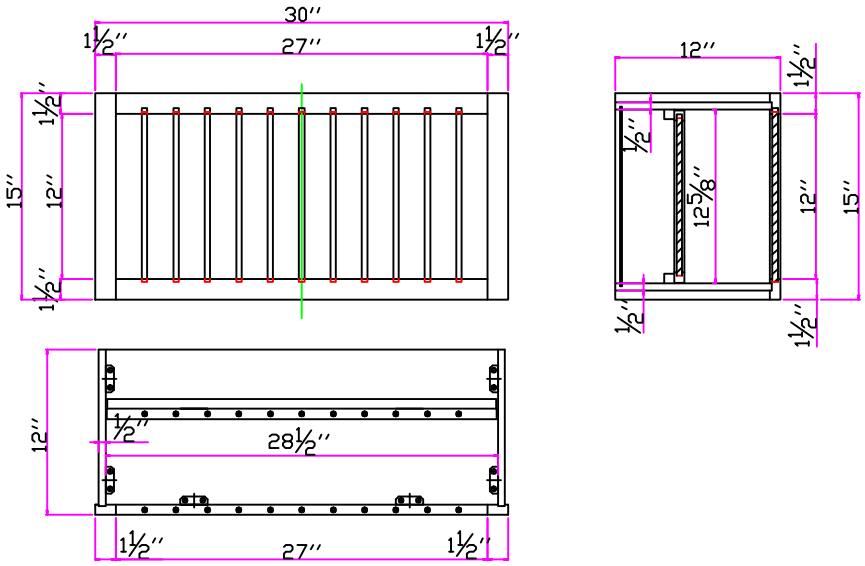

REVISIONS

GHI Custom Cabinetry

ACW

PR3015

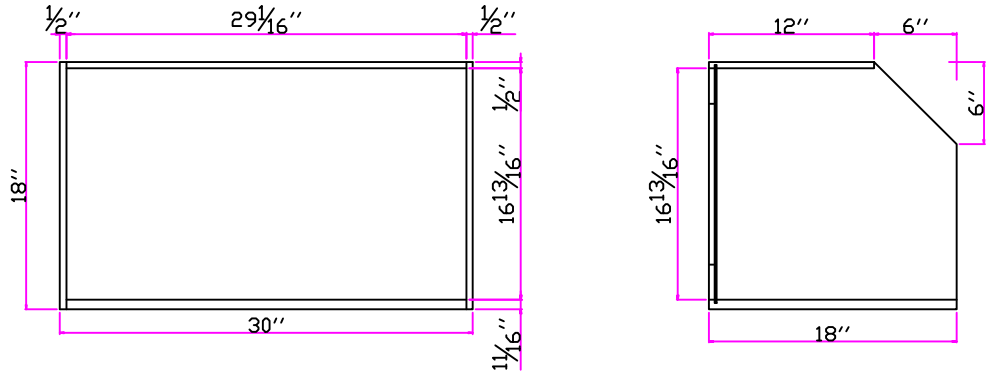

REVISIONS

GHI Custom Cabinetry

ACW

MC3018

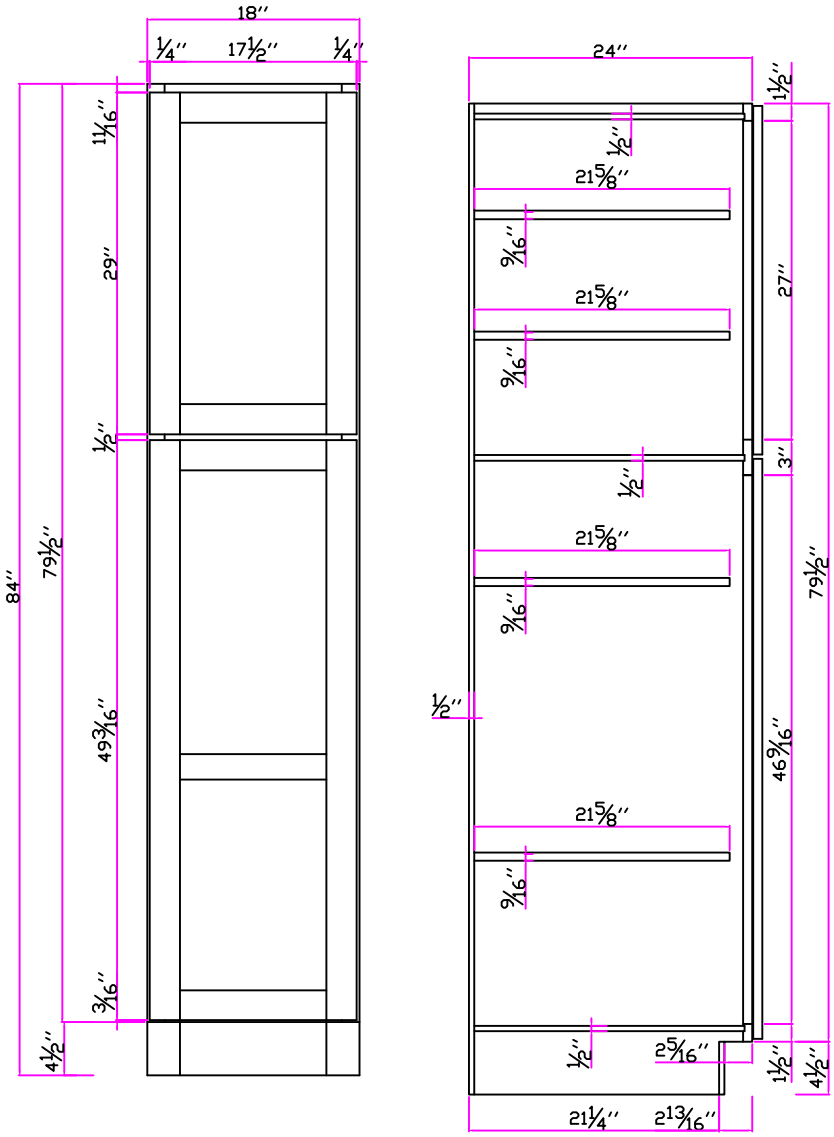

GHI Custom Cabinetry		**ACW**		**WP1884**

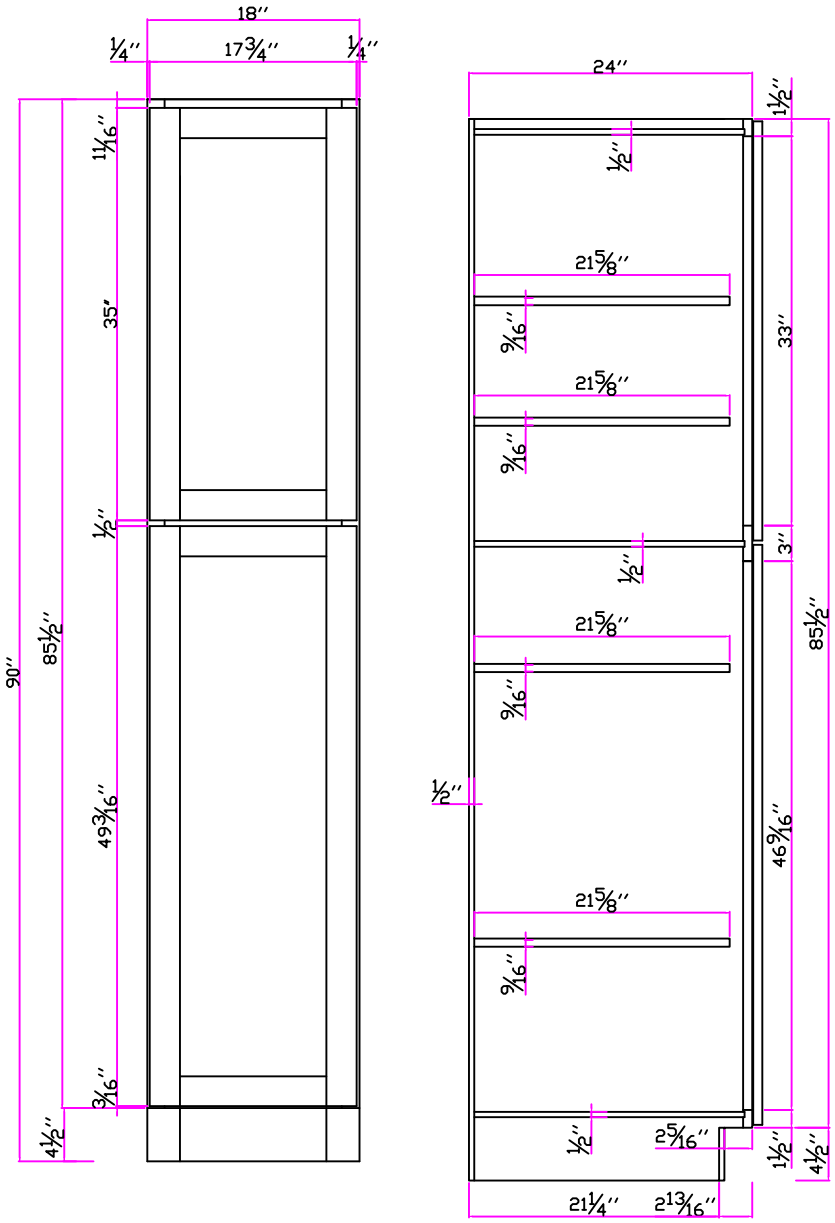

GHI Custom Cabinetry		**ACW**		**WP1890**

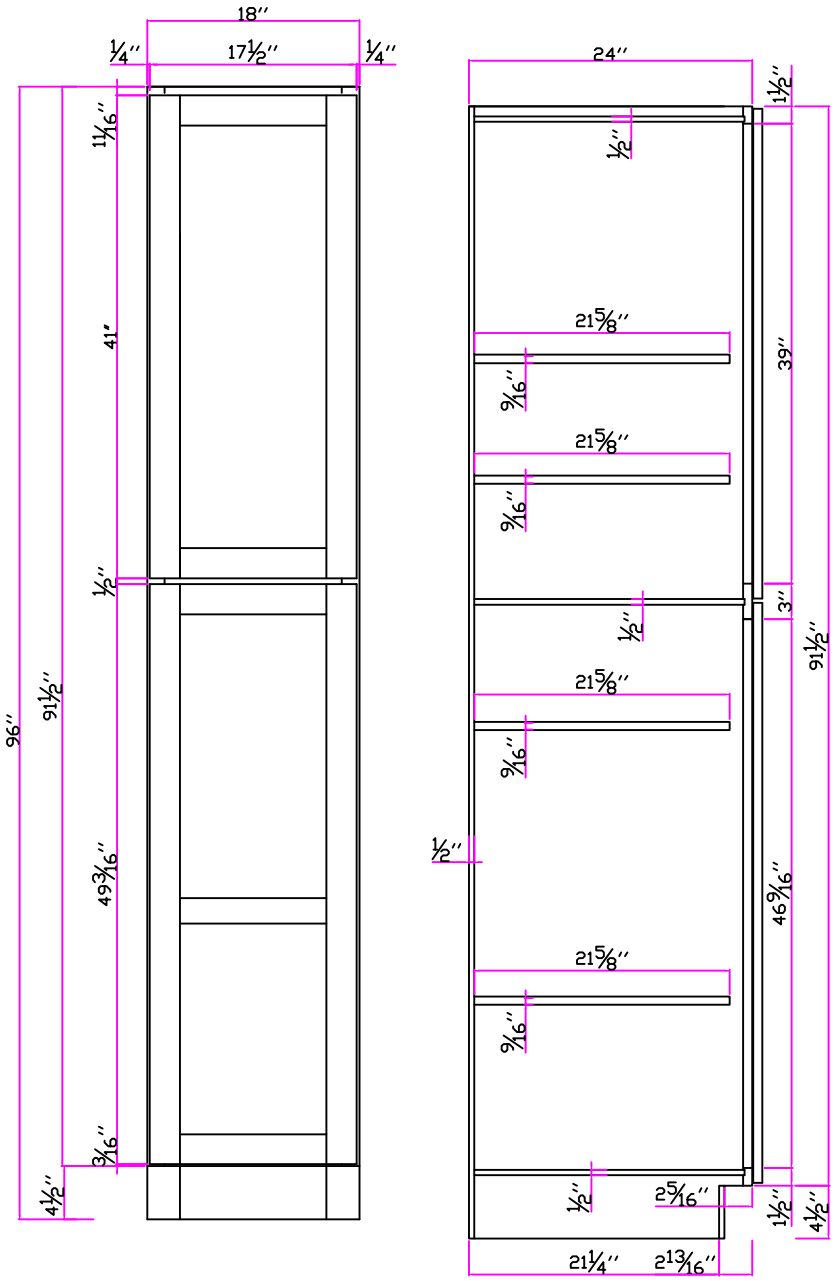

GHI Custom Cabinetry		**ACW**		WP1896

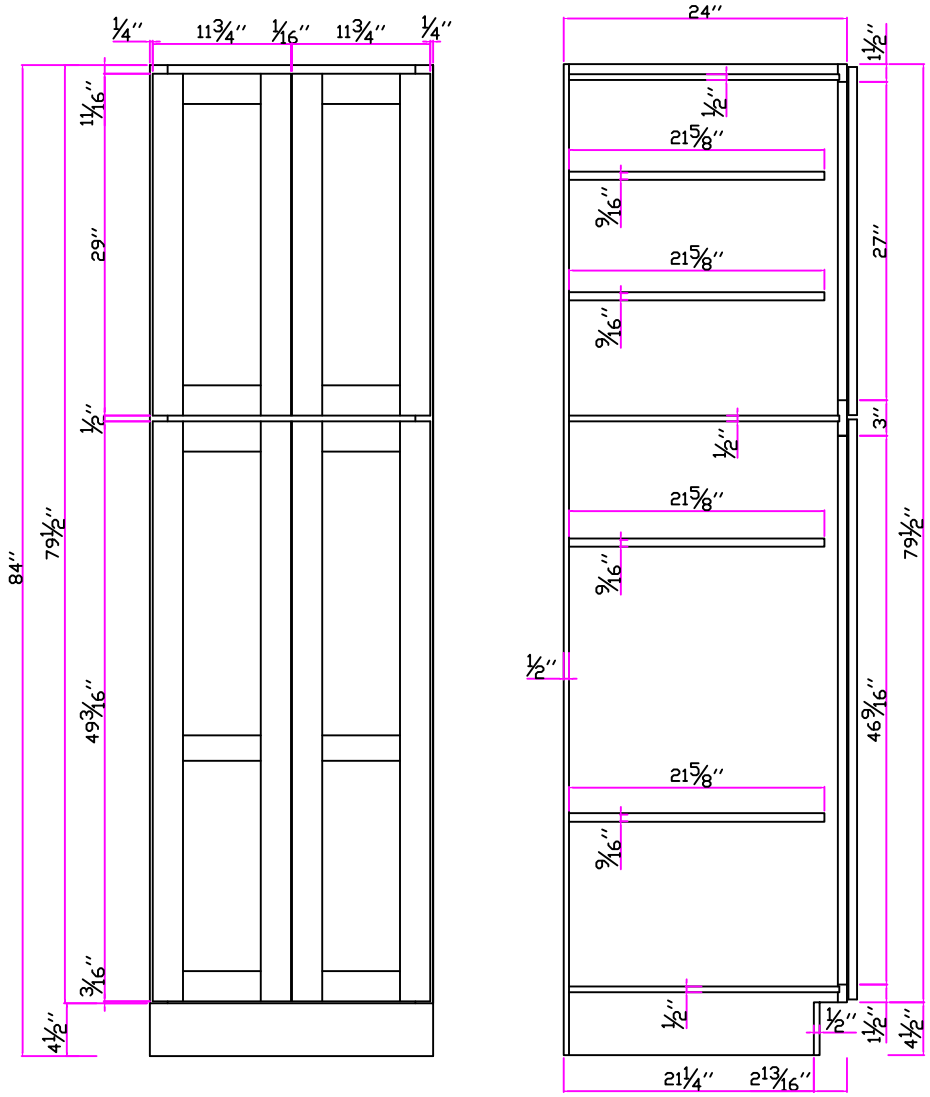

GHI Custom Cabinetry		**ACW**		WP2484

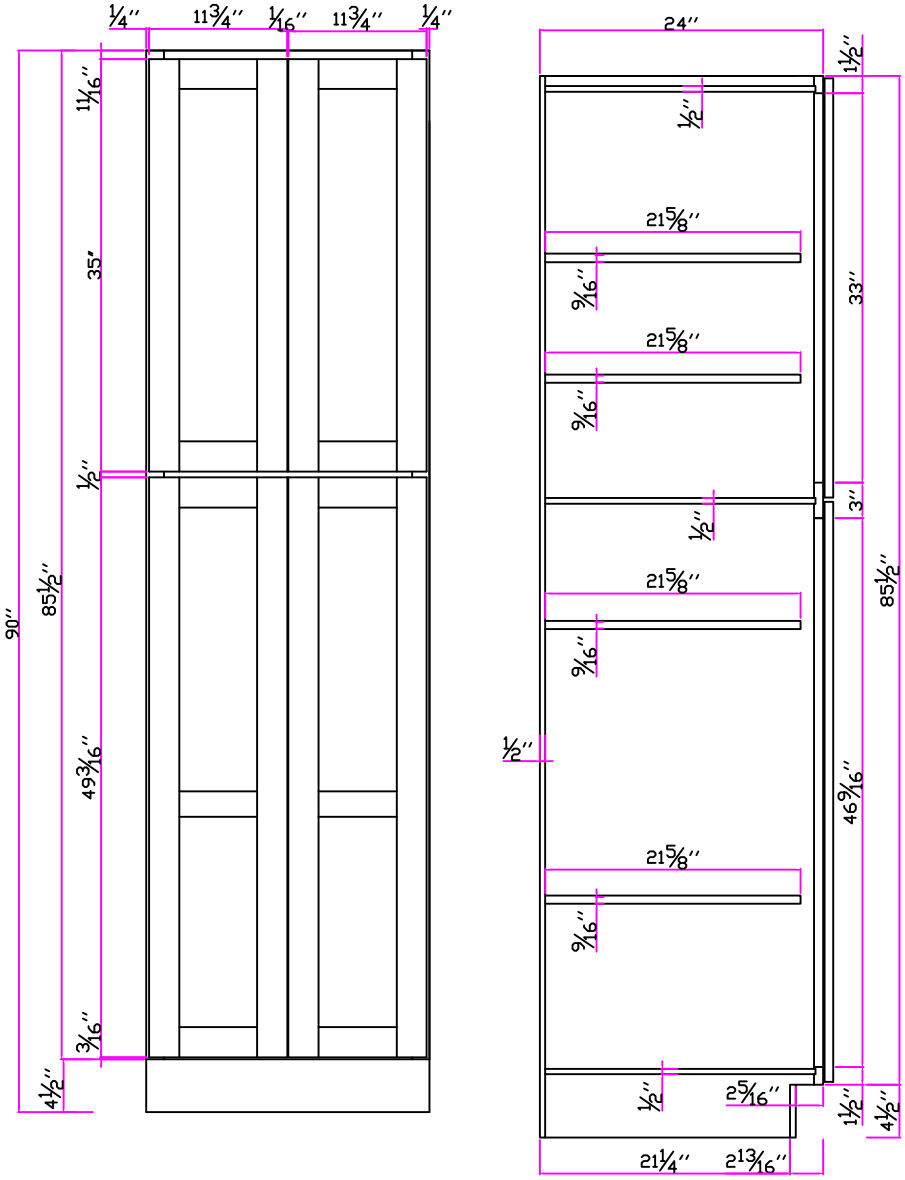

GHI Custom Cabinetry		**ACW**		WP2490

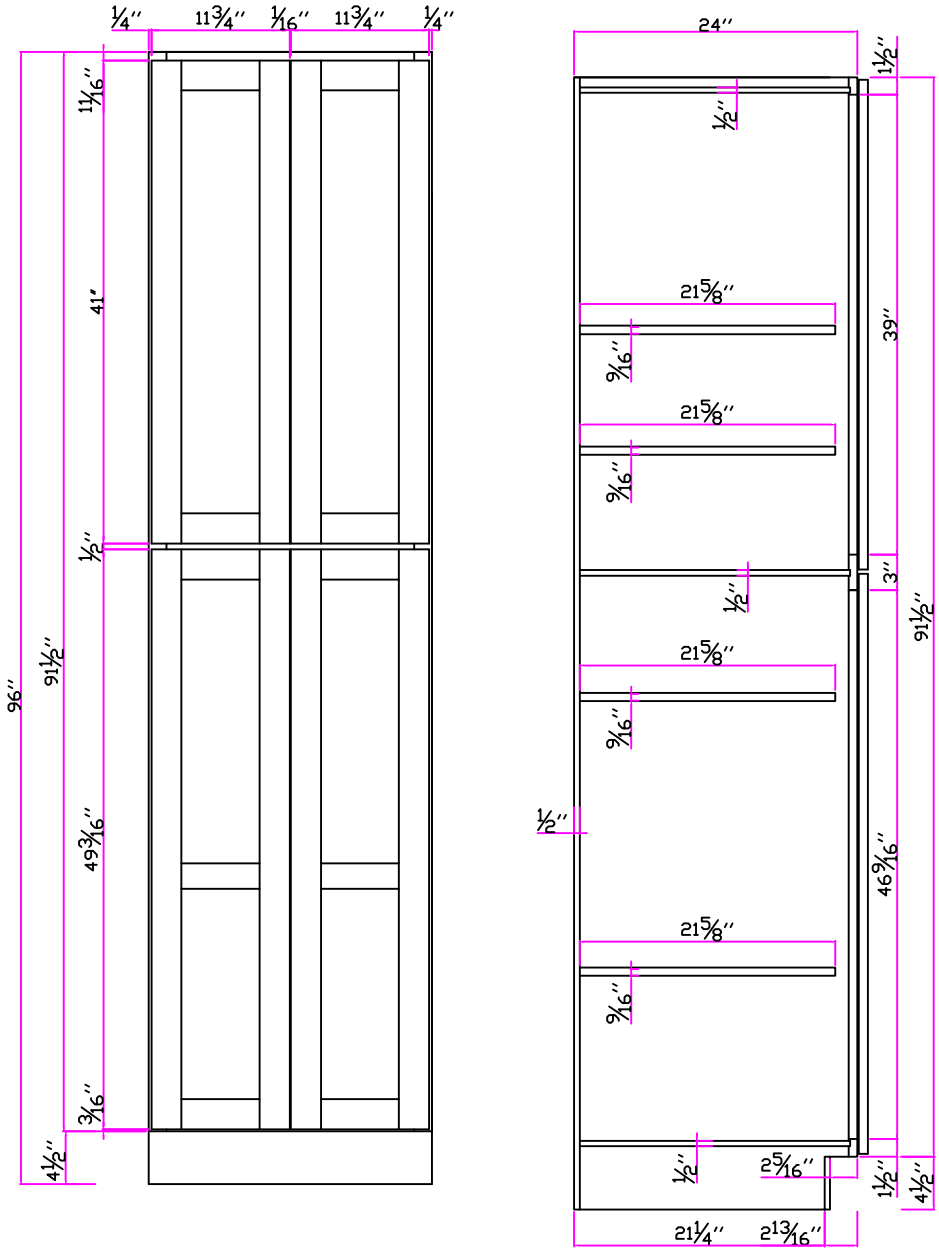

GHI Custom Cabinetry

ACW

WP2496

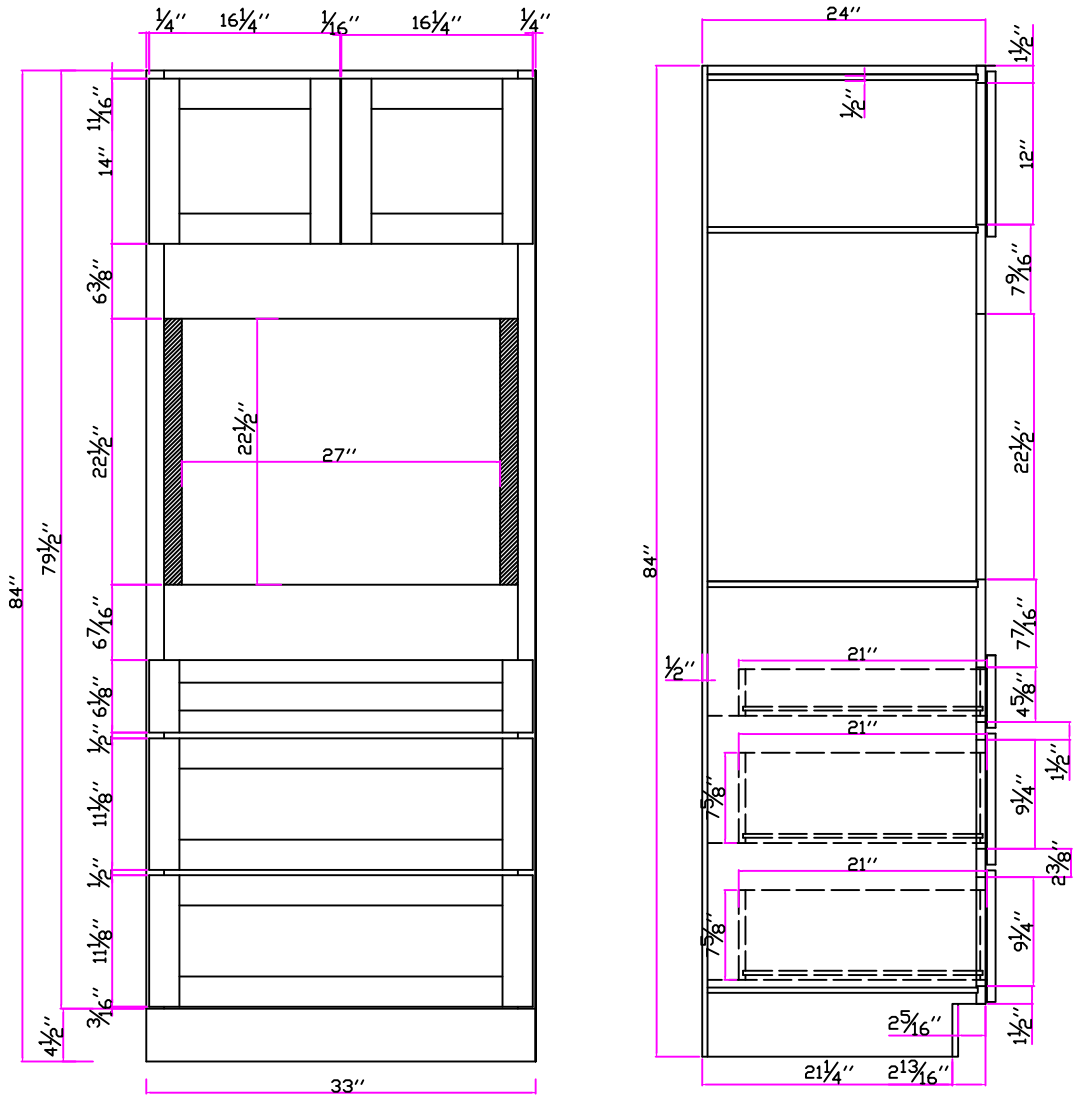

GHI Custom Cabinetry		**ACW**		OU332484

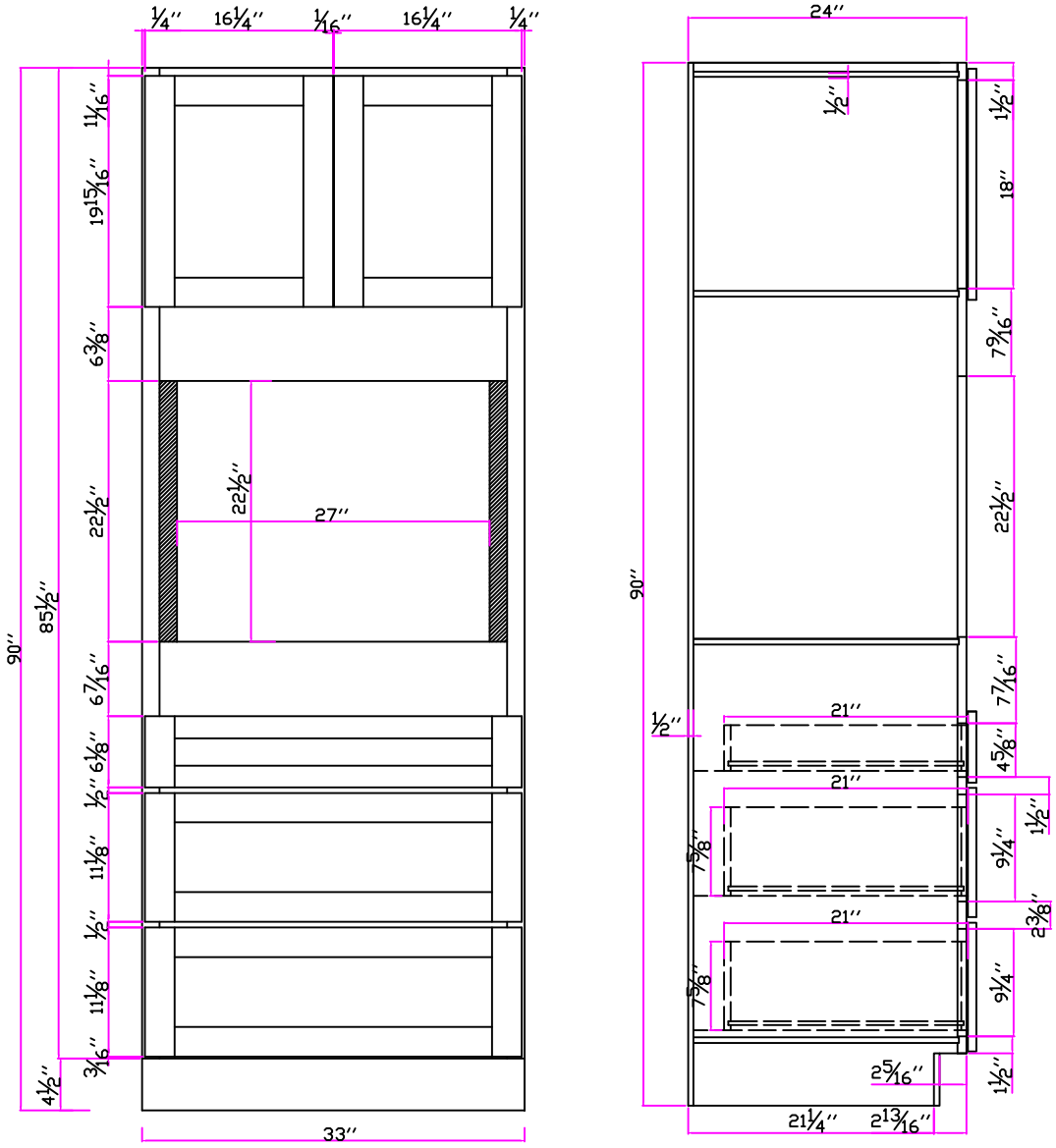

GHI Custom Cabinetry

ACW

OU332490