GHI Specification Guide

***GHI**Cabinets.com*

Table of Contents

Wall Cabinets……P.1-13

Wall Pantry……P.14-16

Base Cabinets ……P.17-22

Sink Bases ……P.23-25

Drawer Bases ……P.26-29

Corner Cabinets ……P.30-33

Special Cabinets ……P.34-35

Oven Cabinets……P.36-37

Accessories……P.38-45

Moldings……P.46-47

Mullion Doors……P.48-51

Wall Cabinets

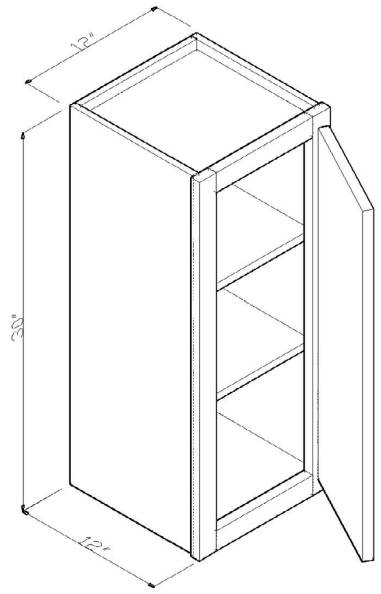

W1230

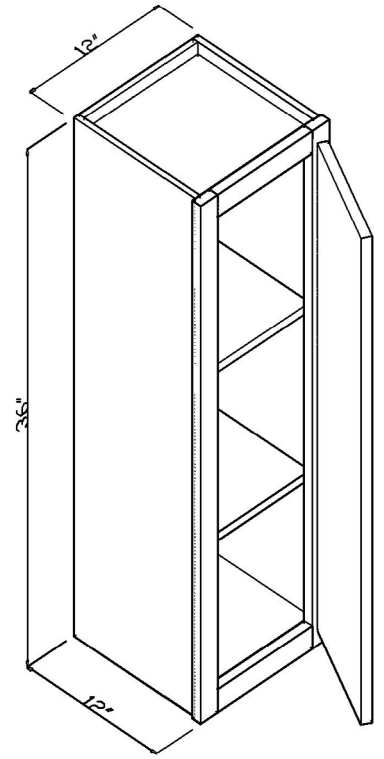

W1236

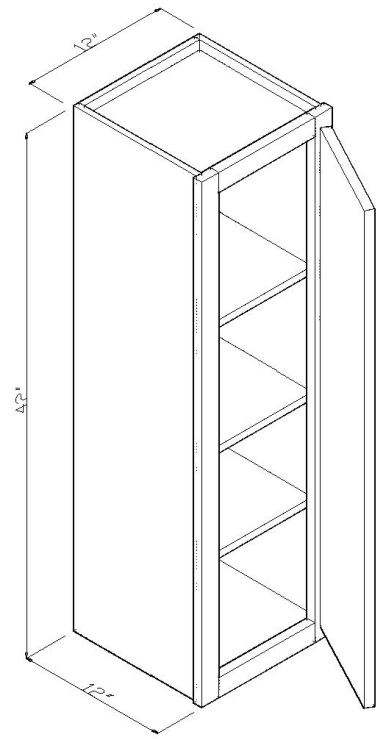

W1242

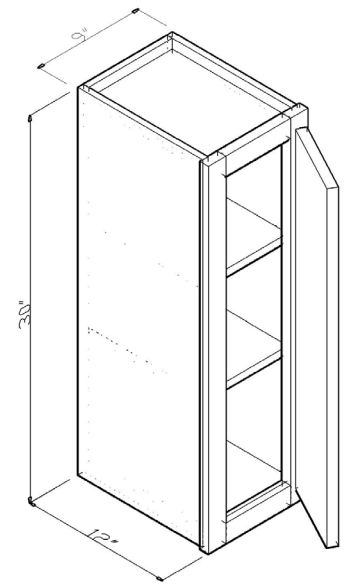

W0930

cabinet SKU's vary per cabinet style

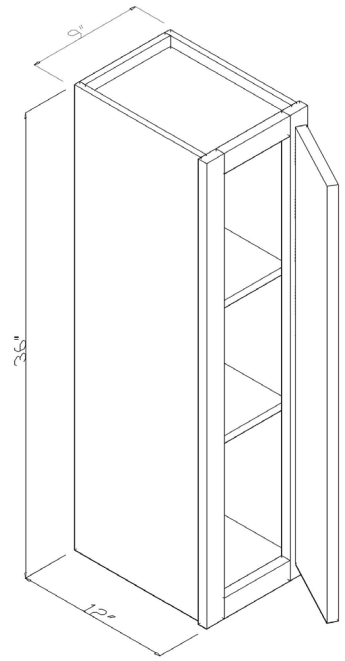

W0936

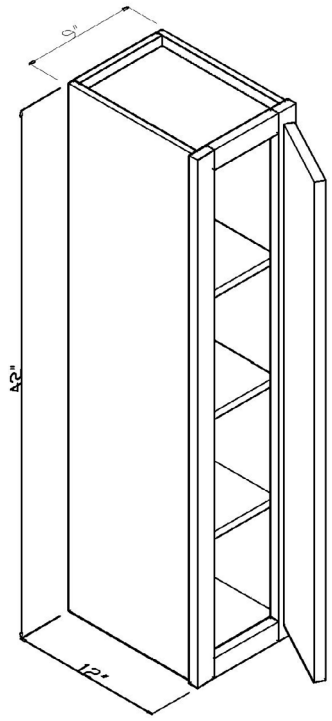

W0942

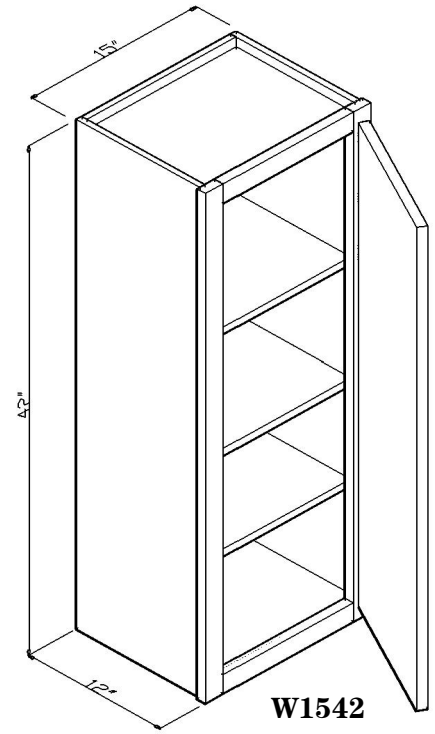

W1542

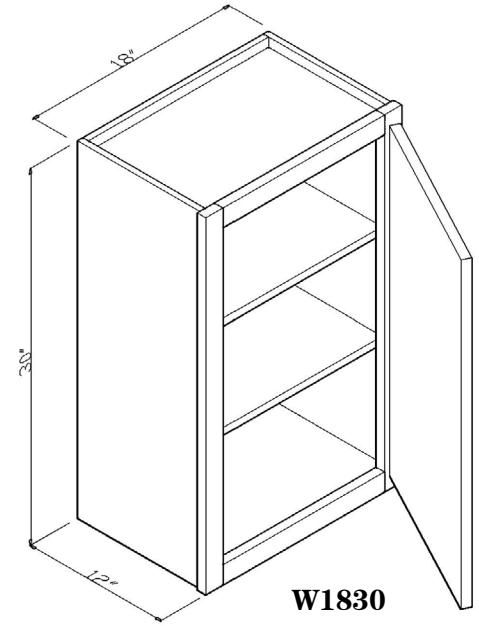

W1830

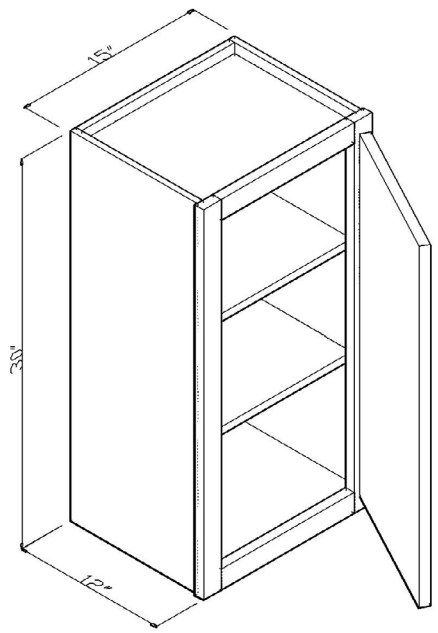

W1530

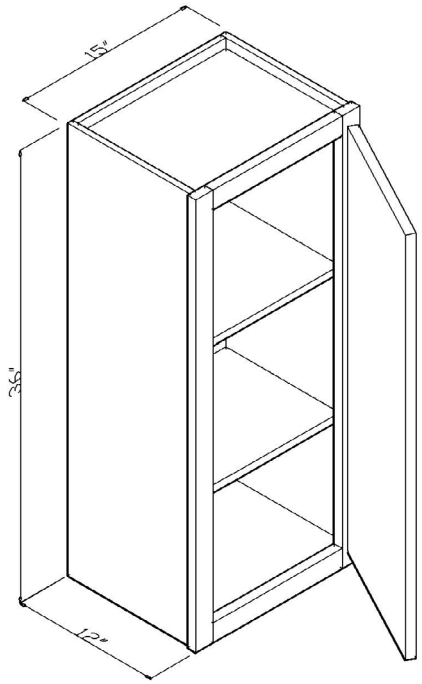

W1536

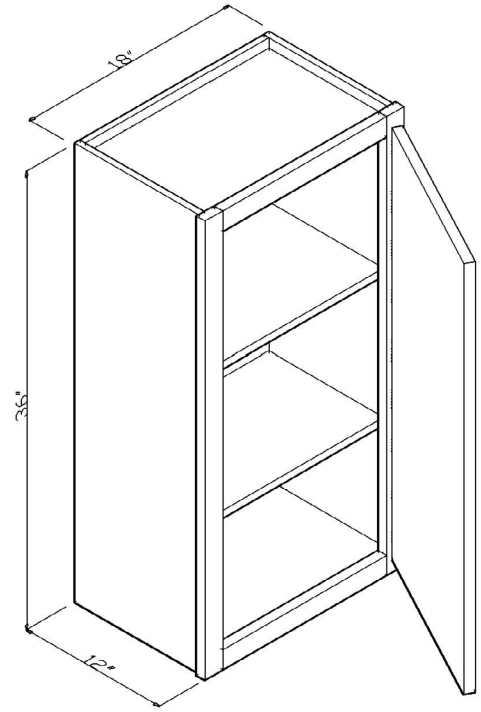

W1836

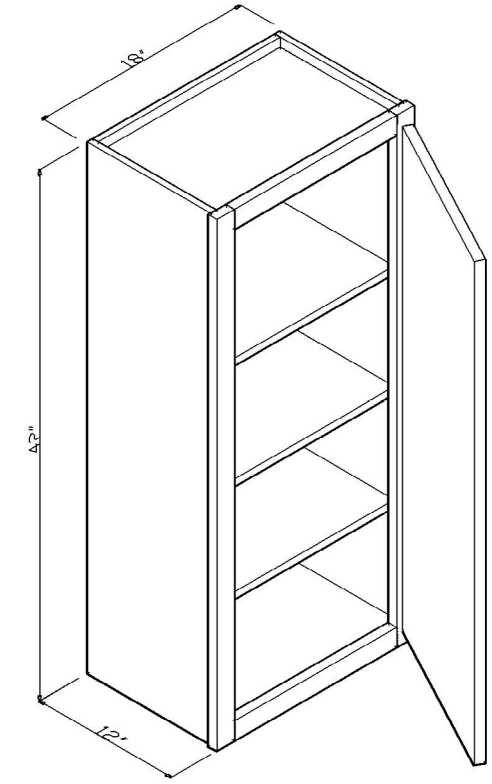

W1842

cabinet SKU's vary per cabinet style

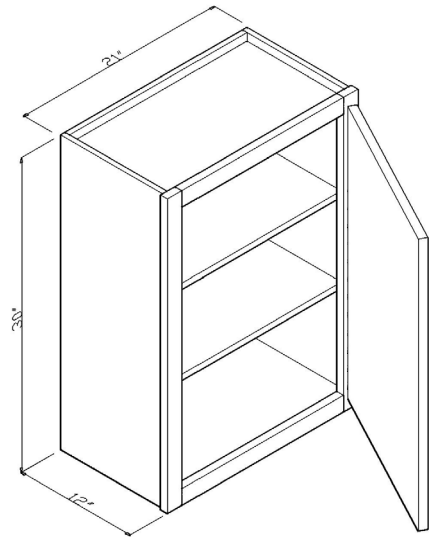

W2130

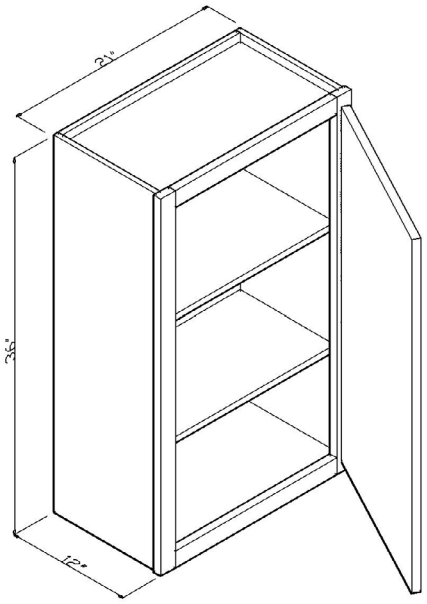

W2136

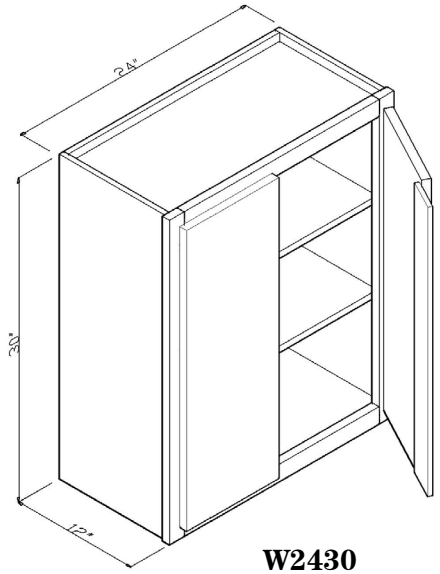

W2430

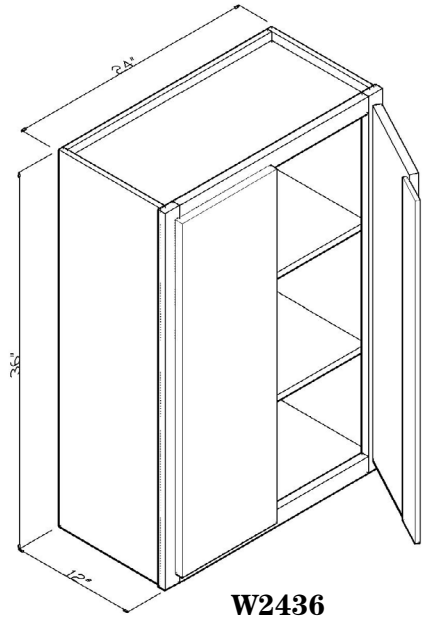

W2436

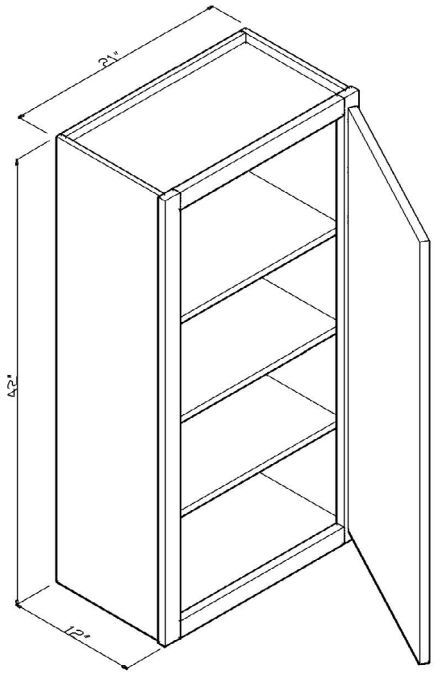

W2142

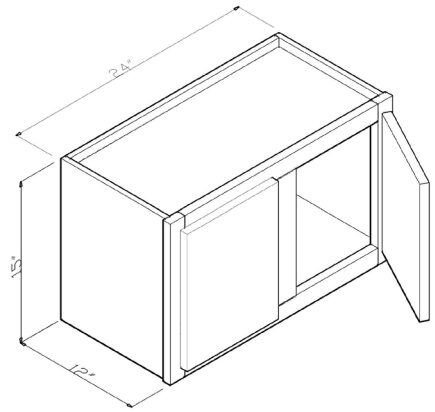

W2415

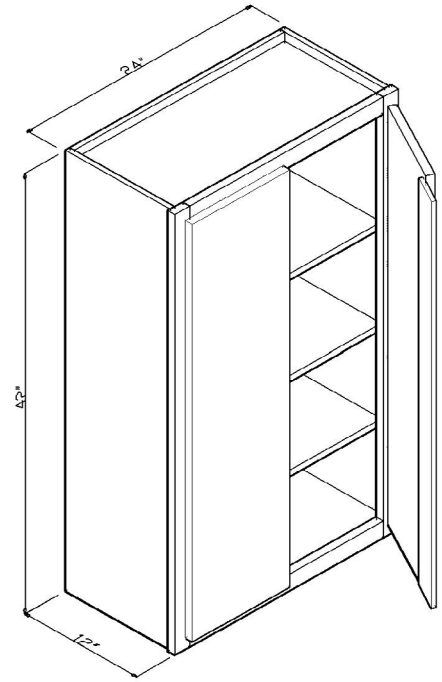

W2442

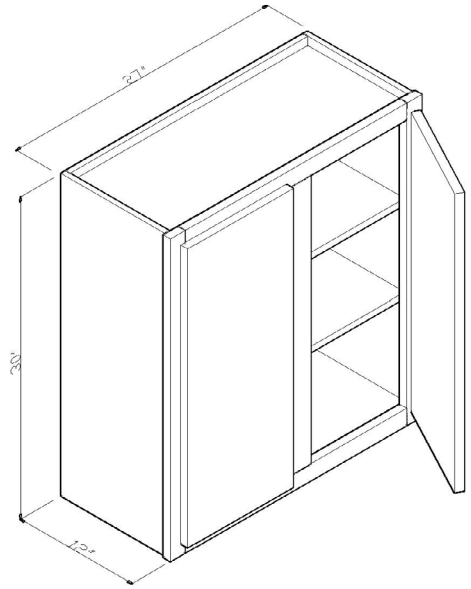

W2730

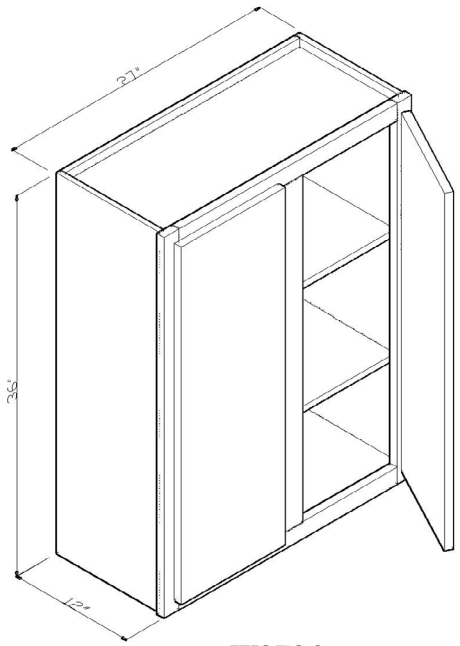

W2736

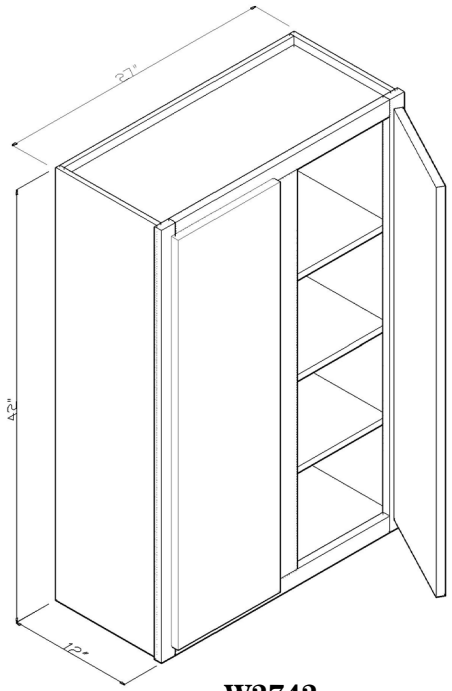

W2742

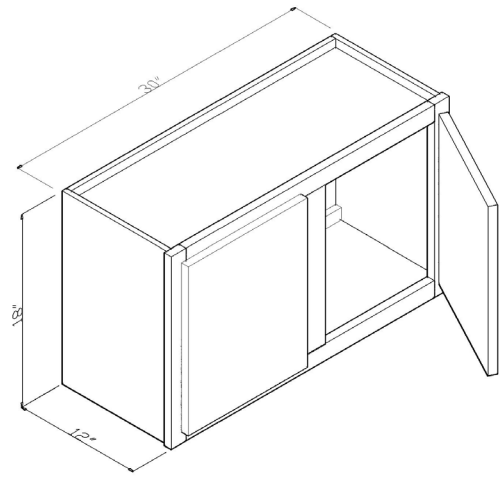

W3018

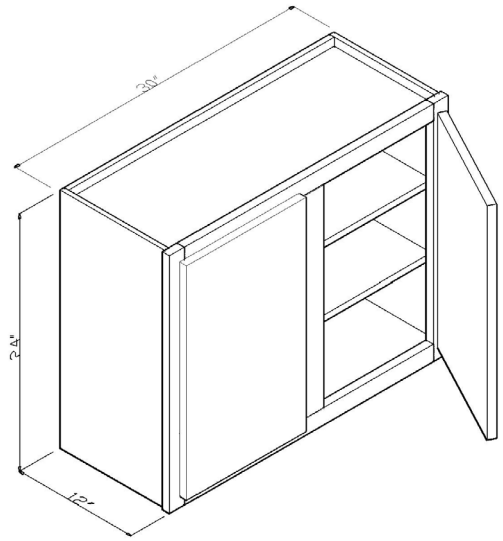

W3024

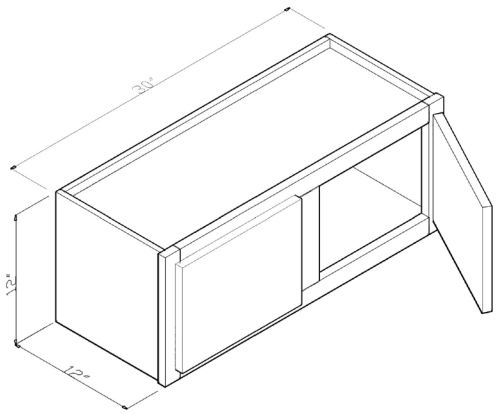

W3012

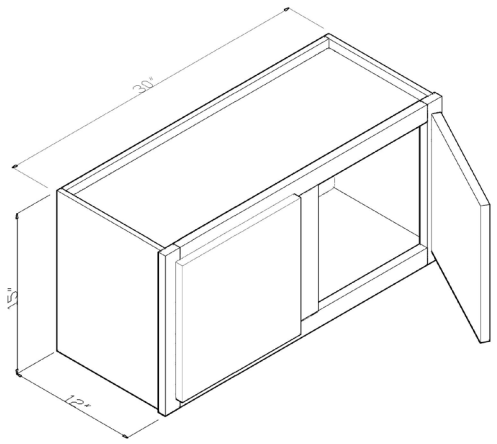

W3015

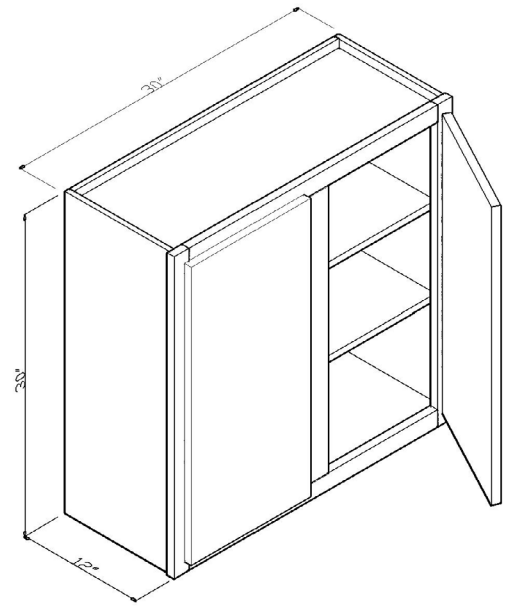

W3030

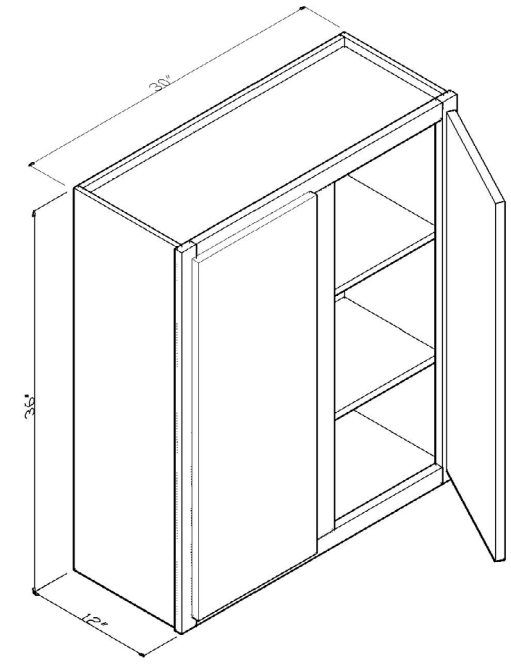

W3036

cabinet SKU's vary per cabinet style

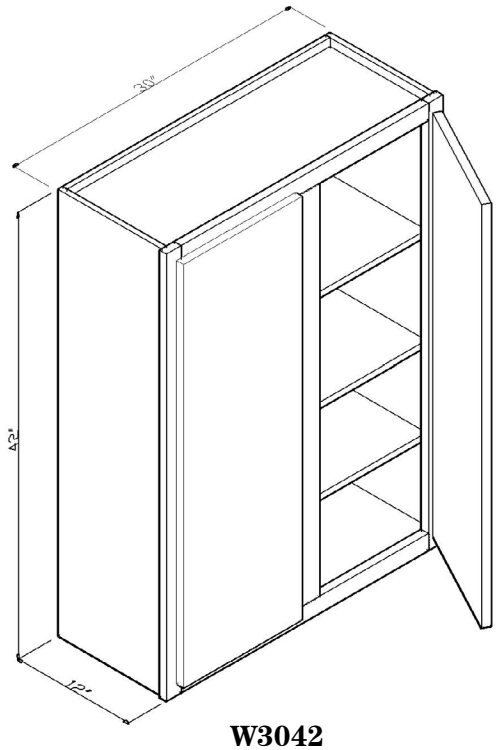

W3042

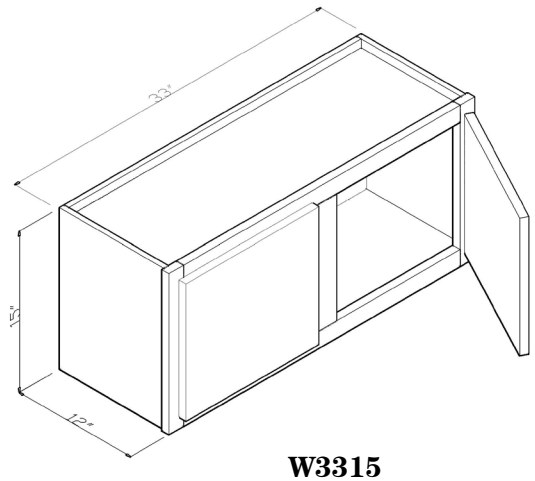

W3315

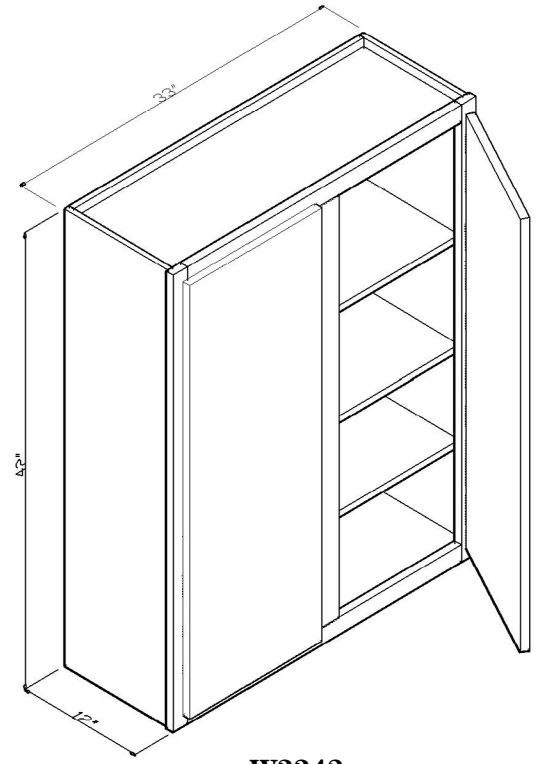

W3342

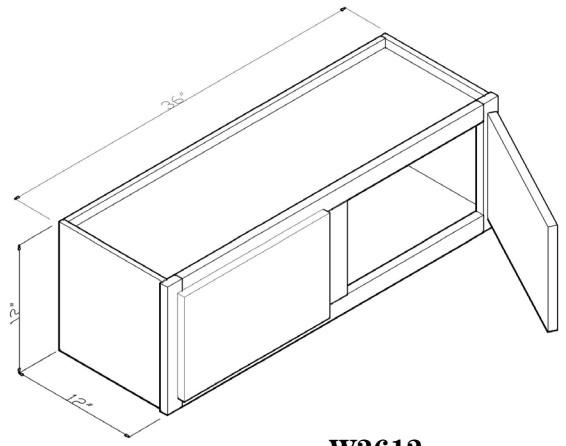

W3612

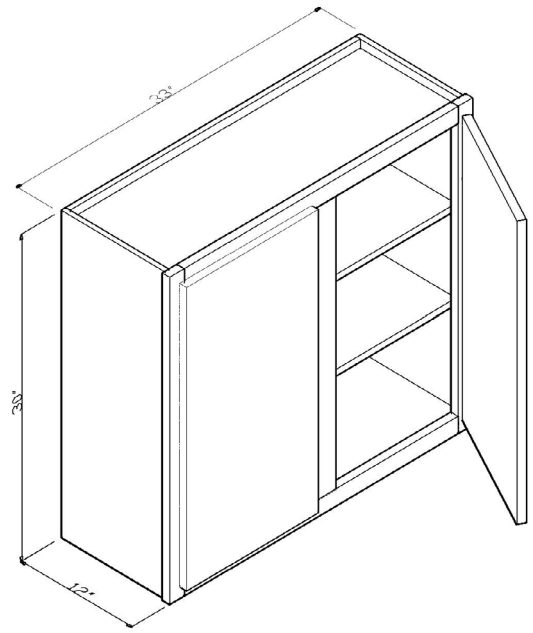

W3330

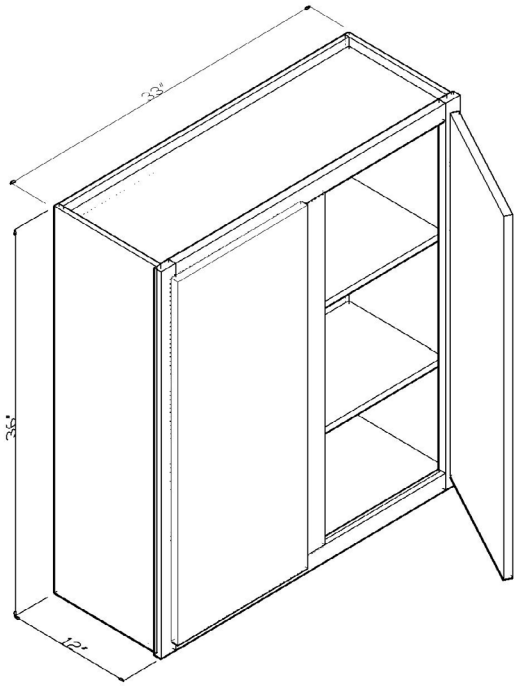

W3336

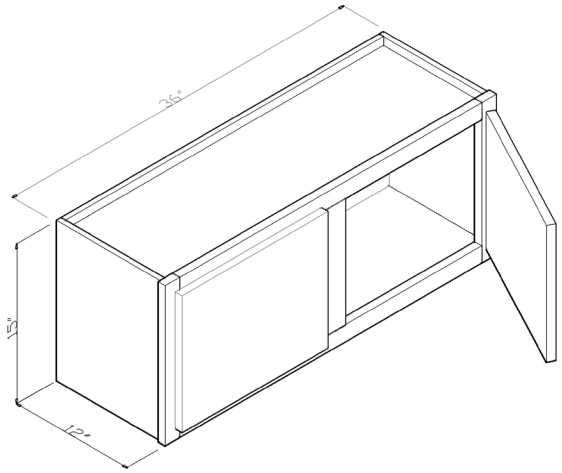

W3615

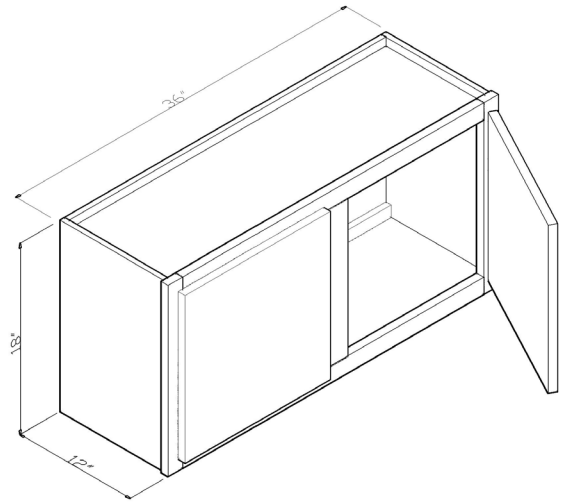

W3618

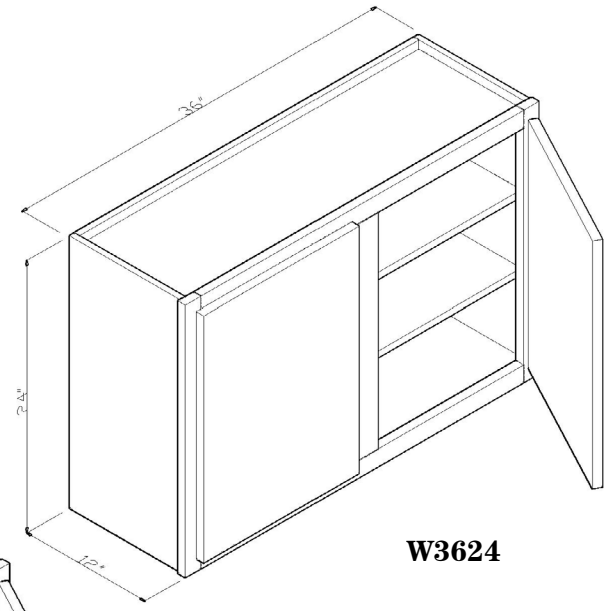

W3624

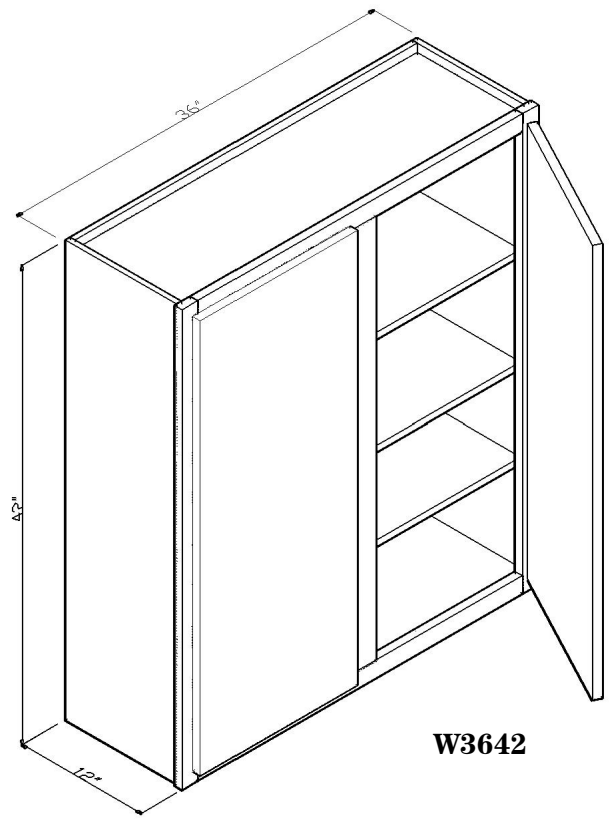

W3642

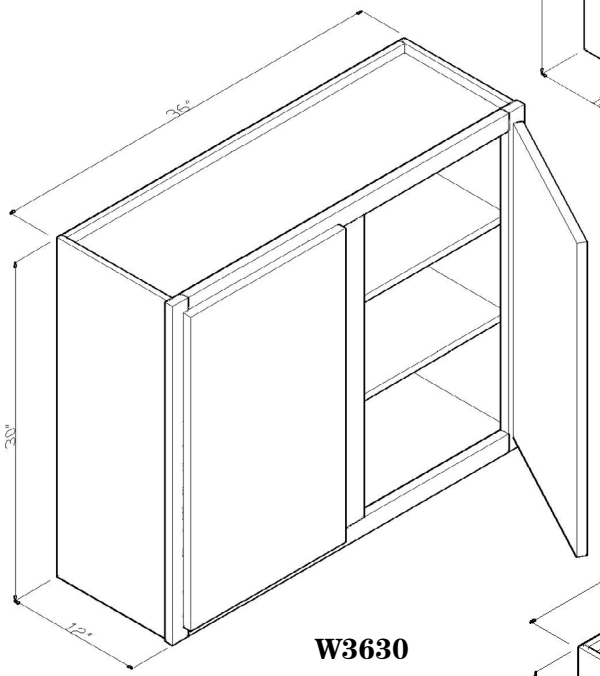

W3630

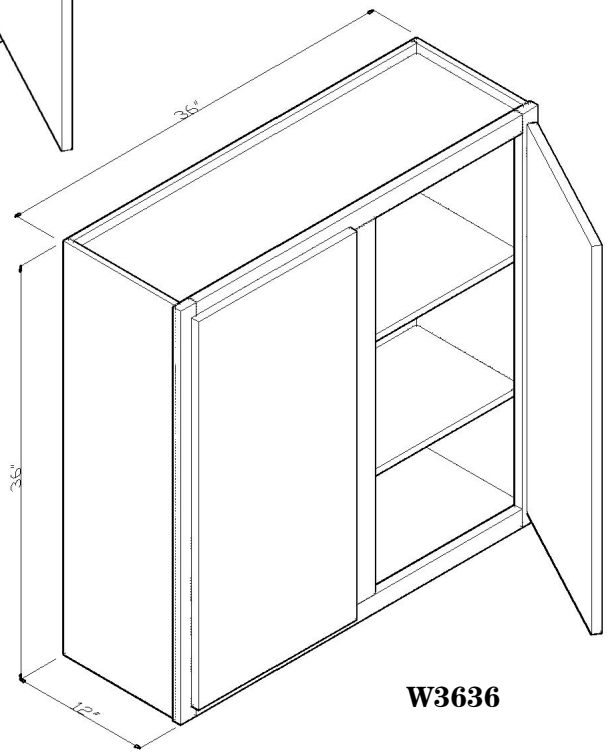

W3636

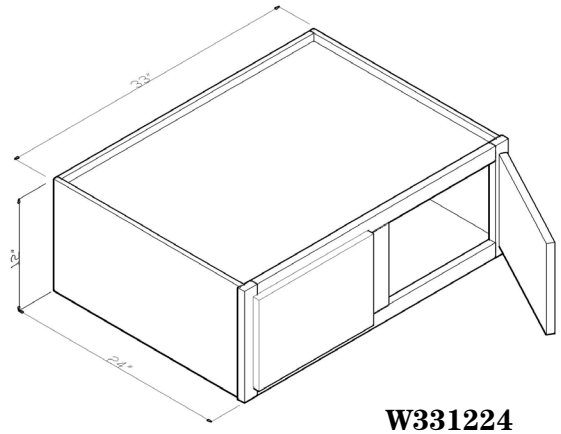

W331224

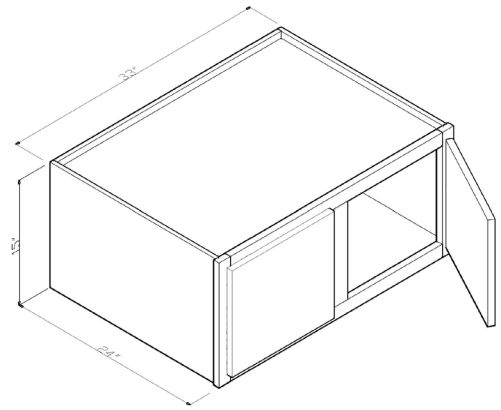

W331524

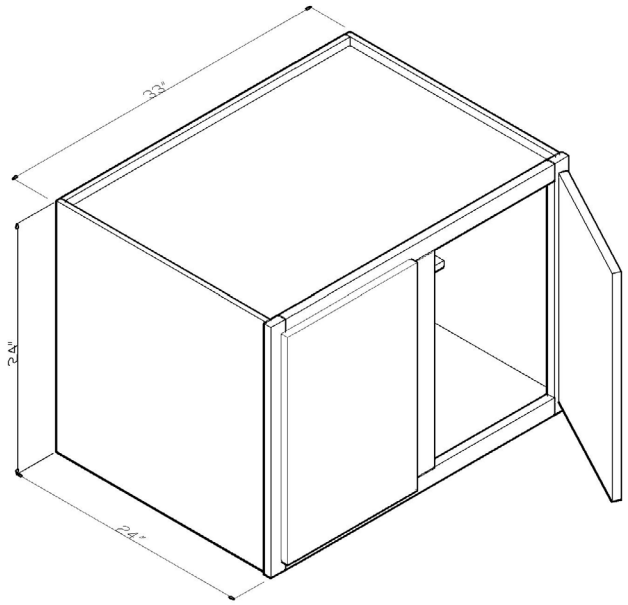

W332424

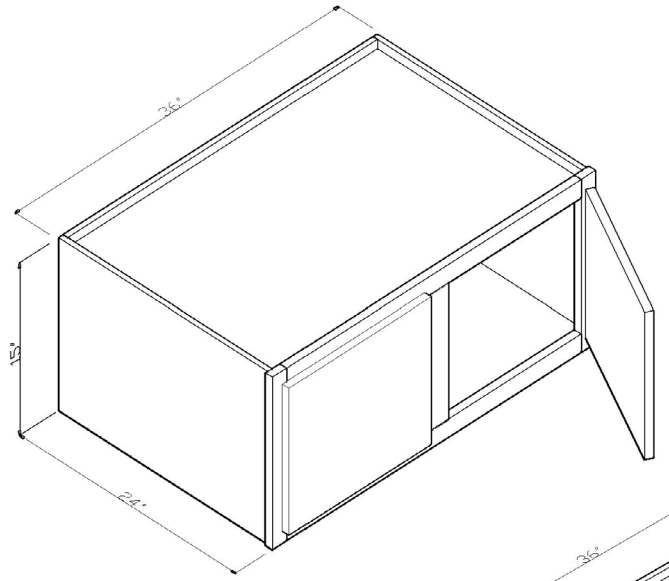

W361524

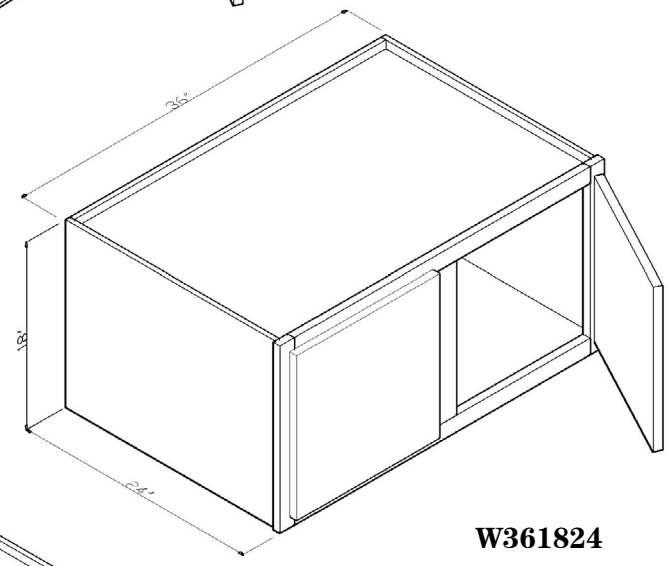

W361824

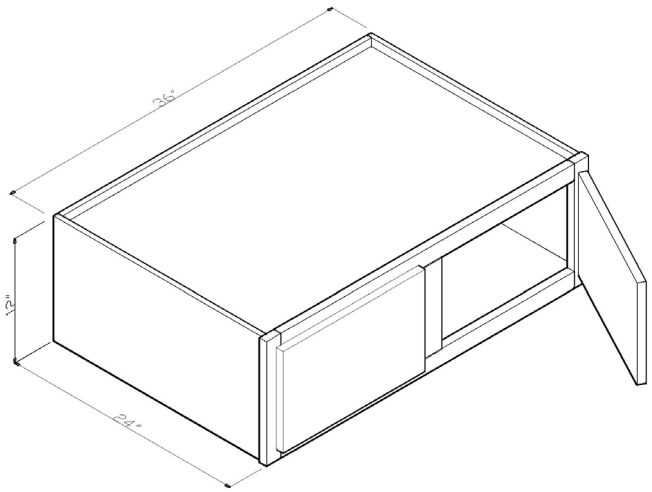

W361224

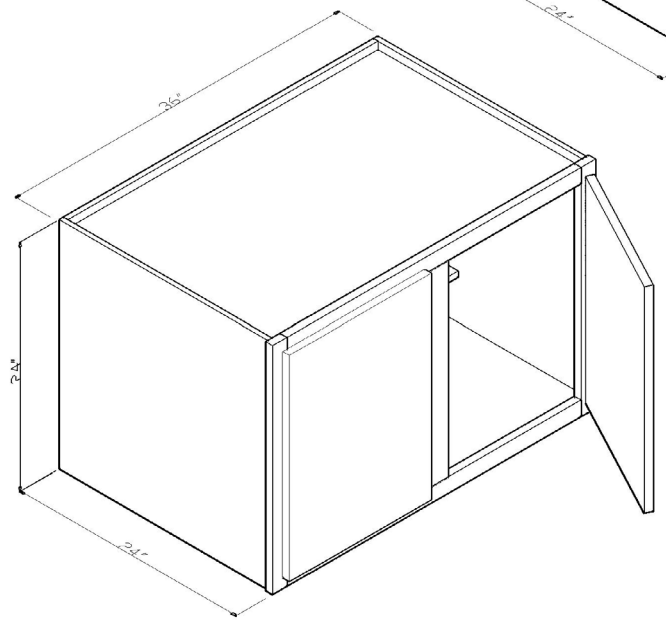

W362424

cabinet SKU's vary per cabinet style

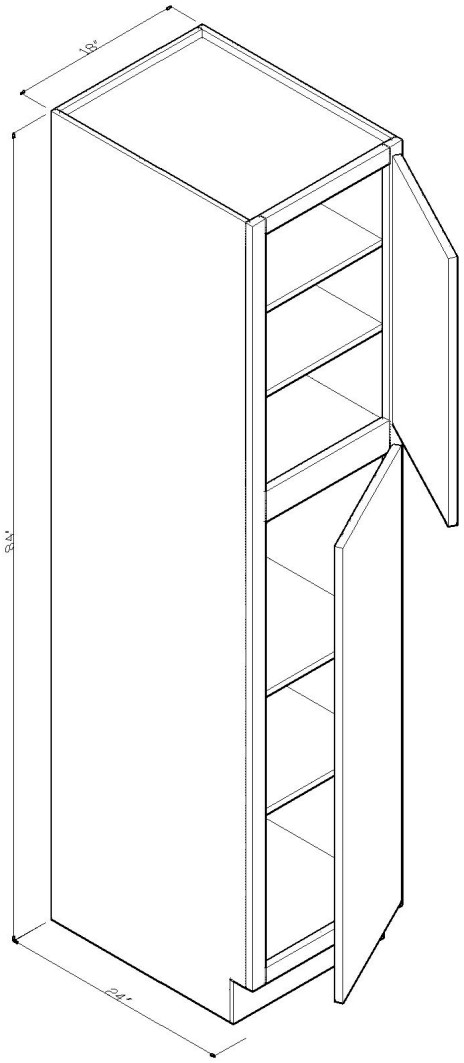

WP1884

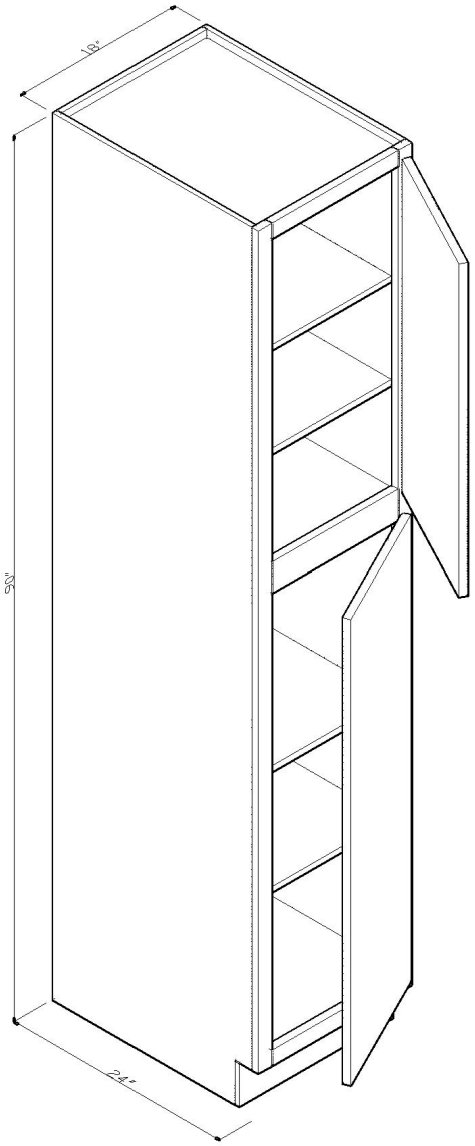

WP1890

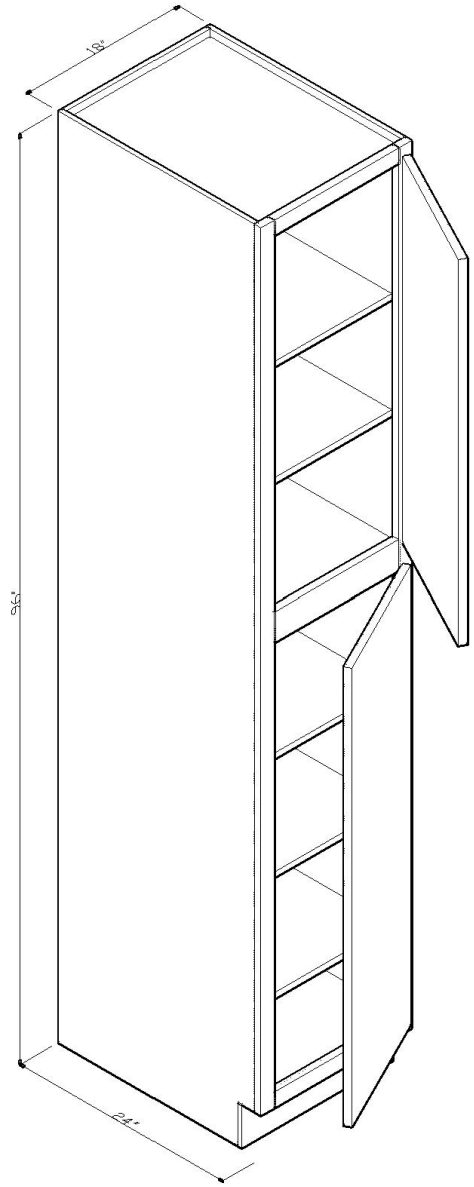

WP1896

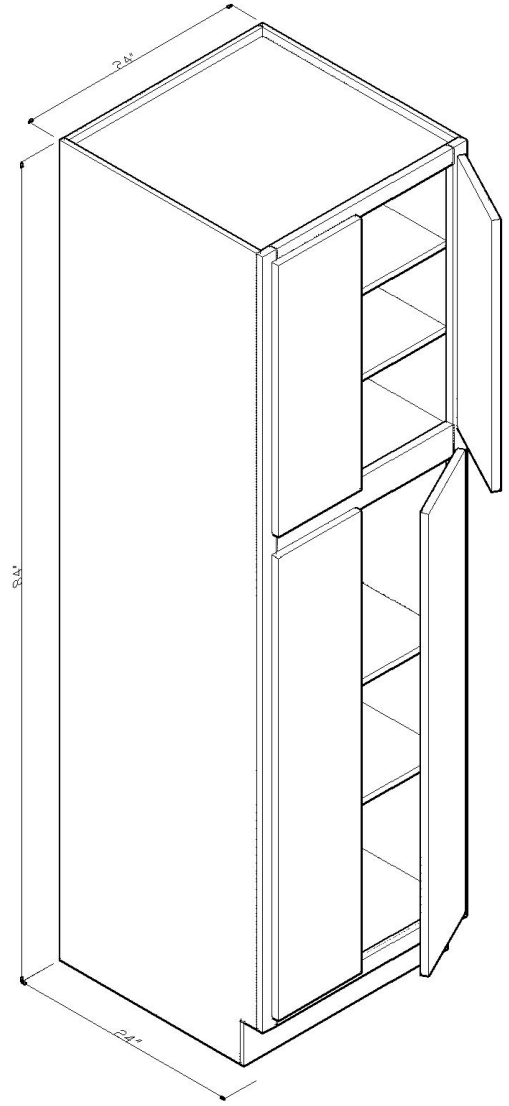

WP2484

cabinet SKU's vary per cabinet style

Wall Pantry

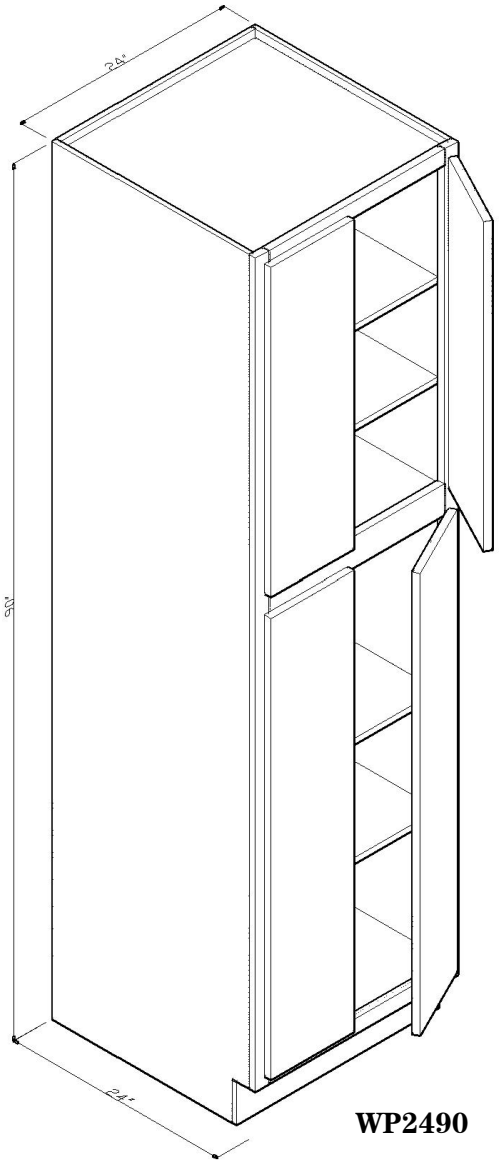

WP2490

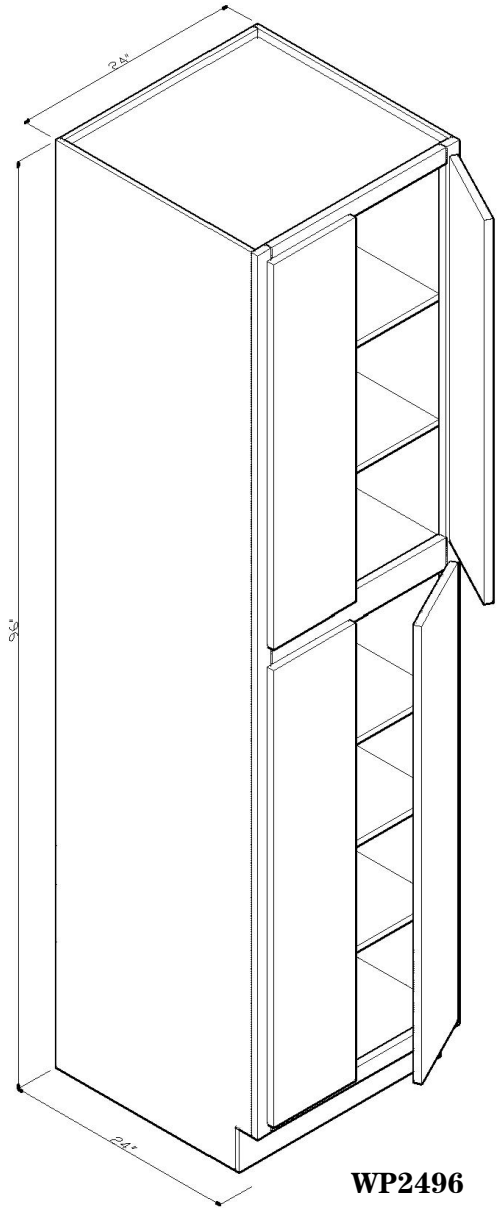

WP2496

Base Cabinets

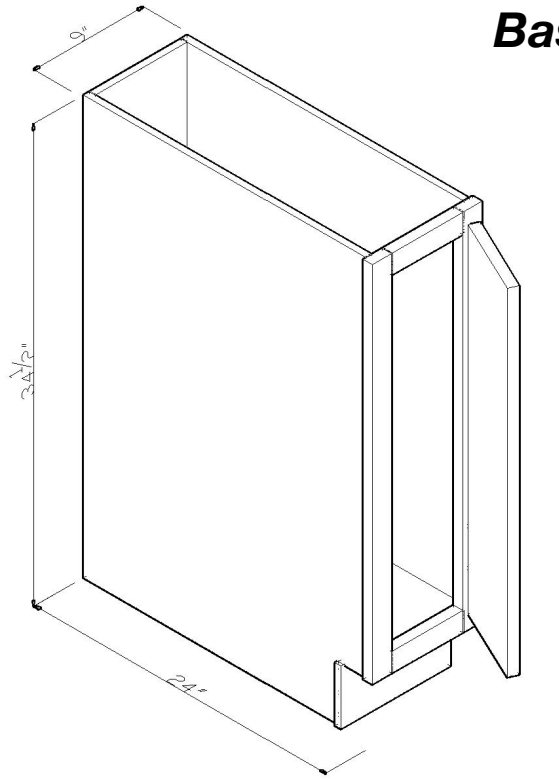

B09

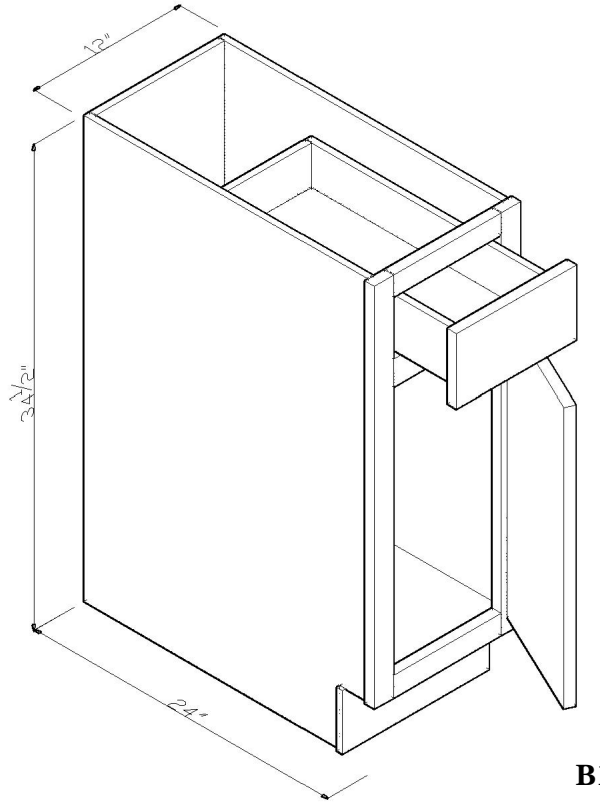

B12

cabinet SKU's vary per cabinet style

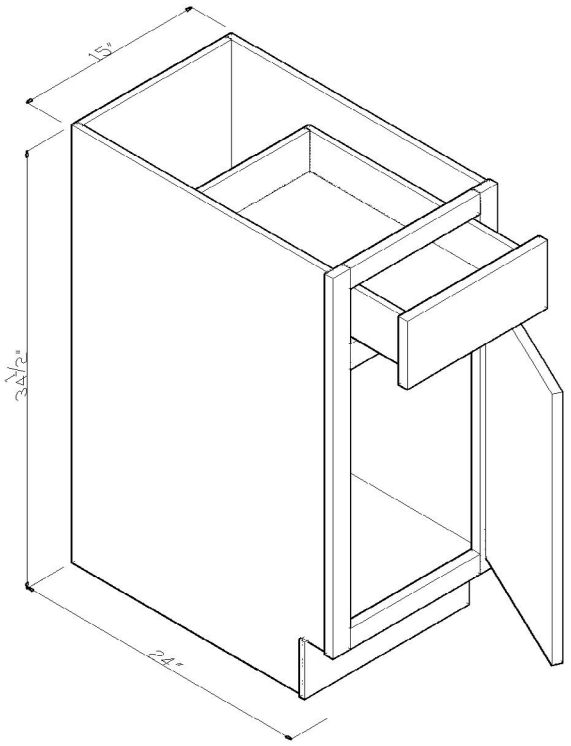

B15

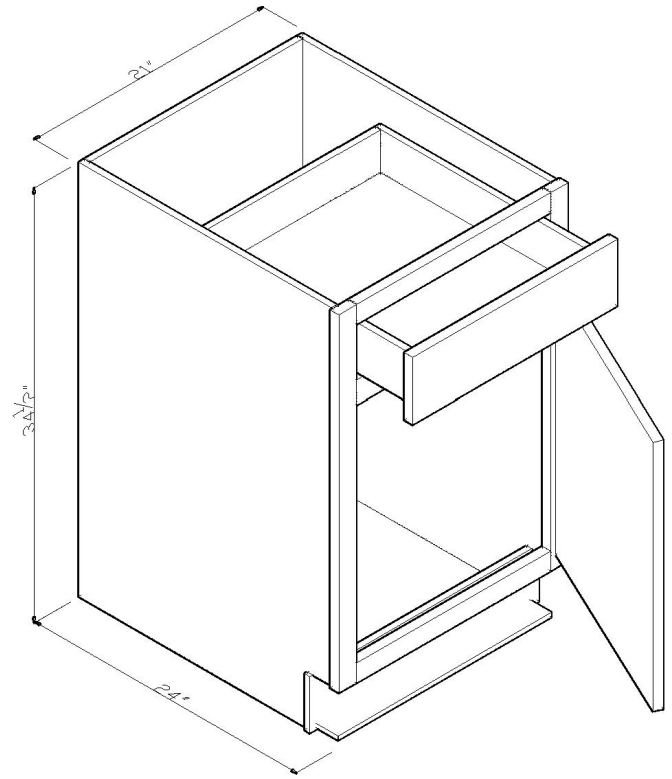

B21

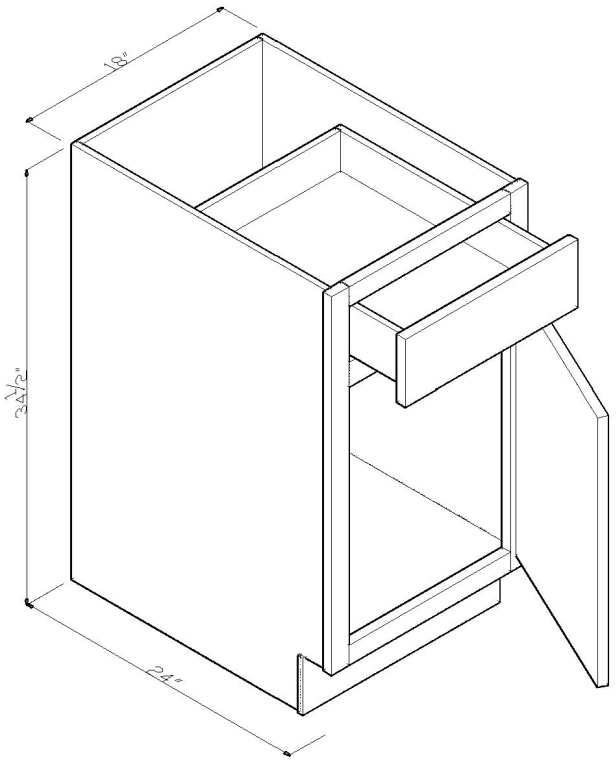

B18

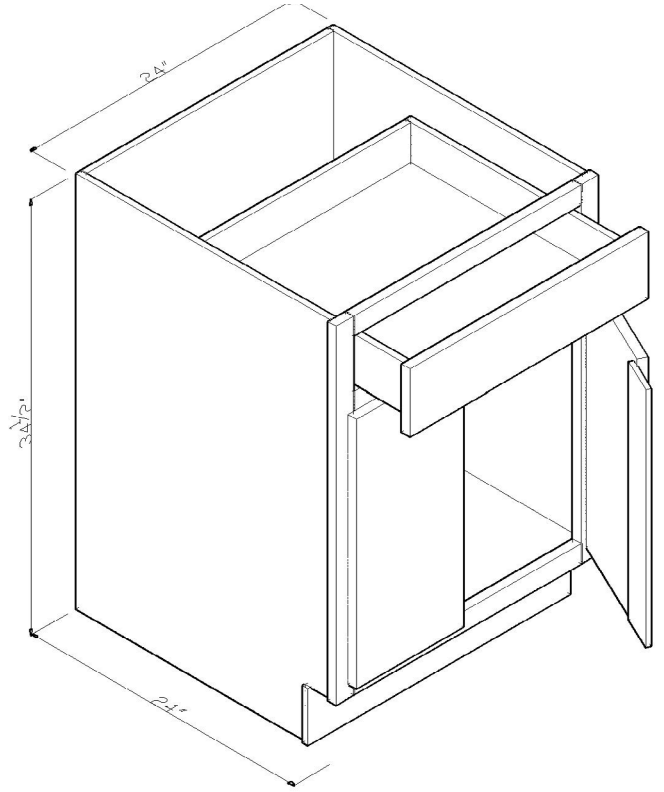

B24

cabinet SKU's vary per cabinet style

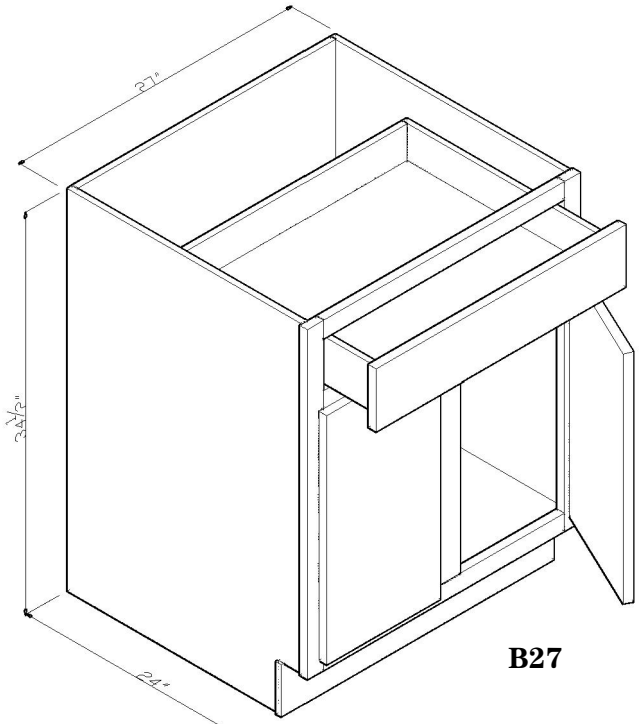

B27

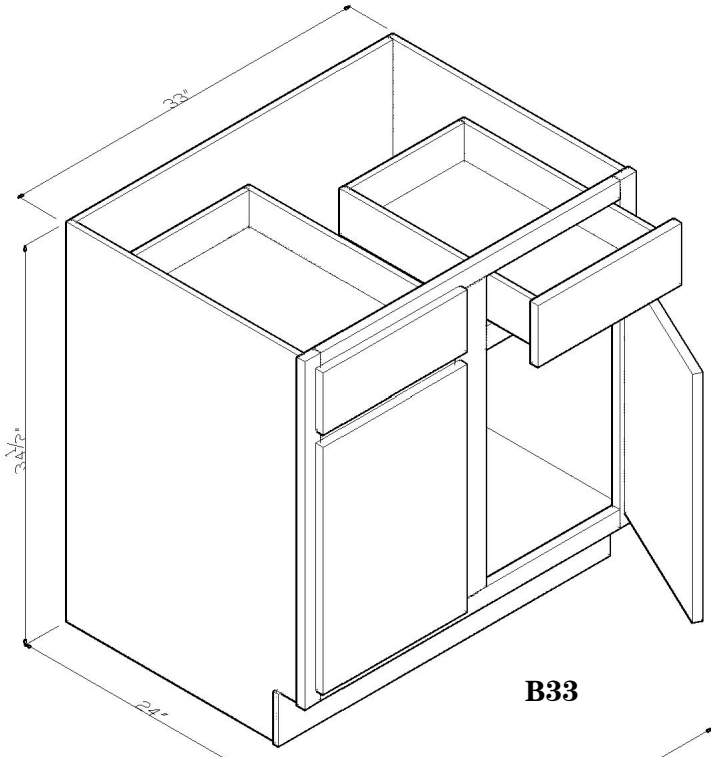

B33

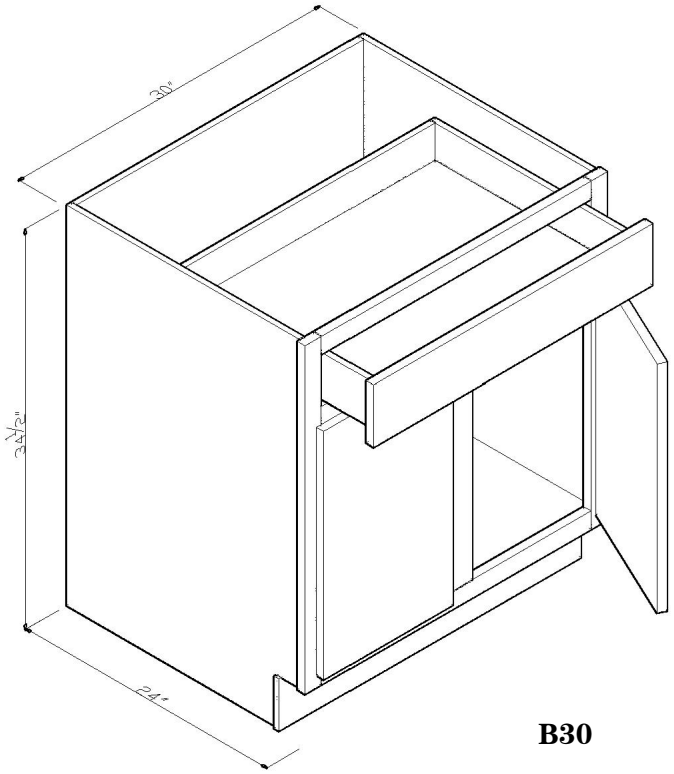

B30

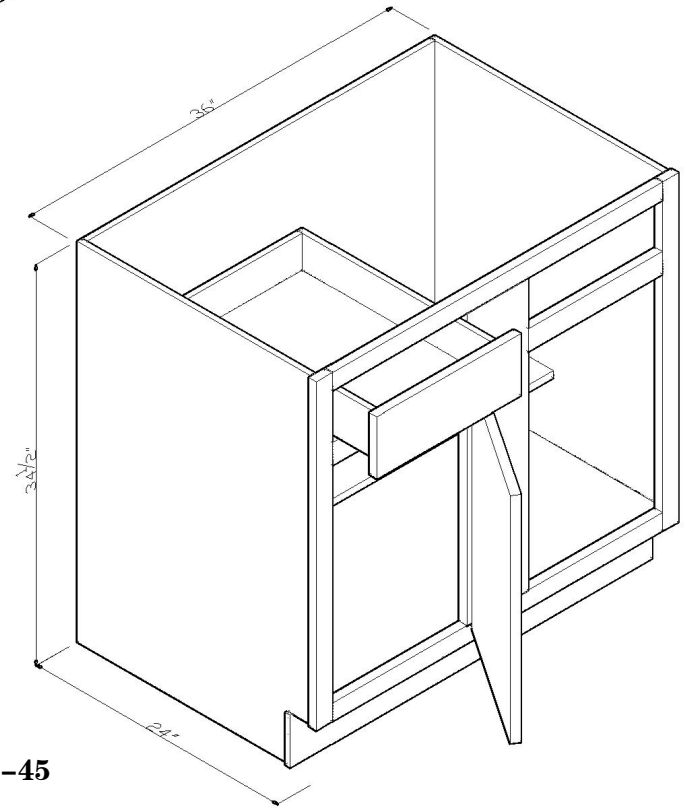

BBC42–45

cabinet SKU's vary per cabinet style

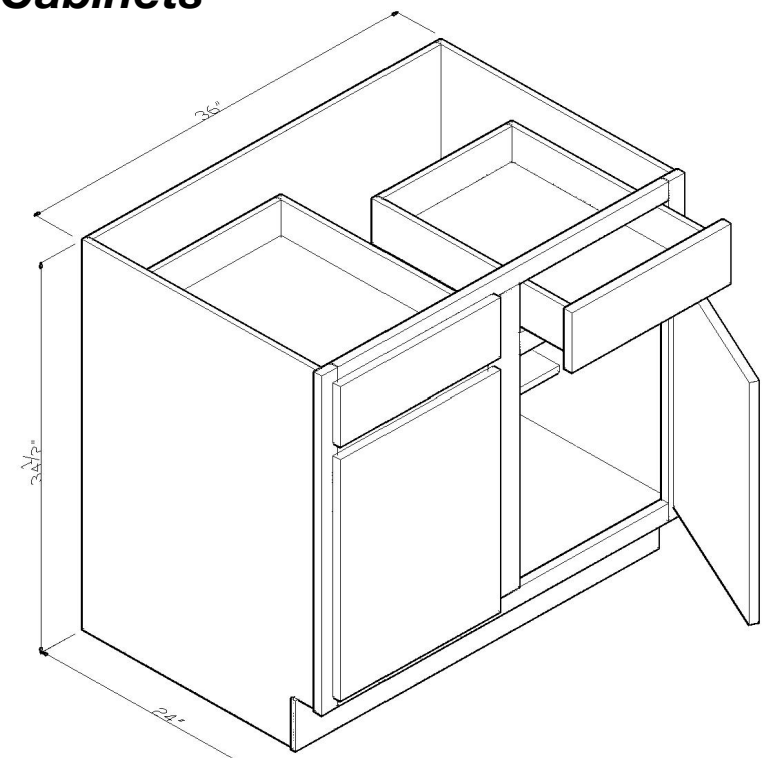

B36

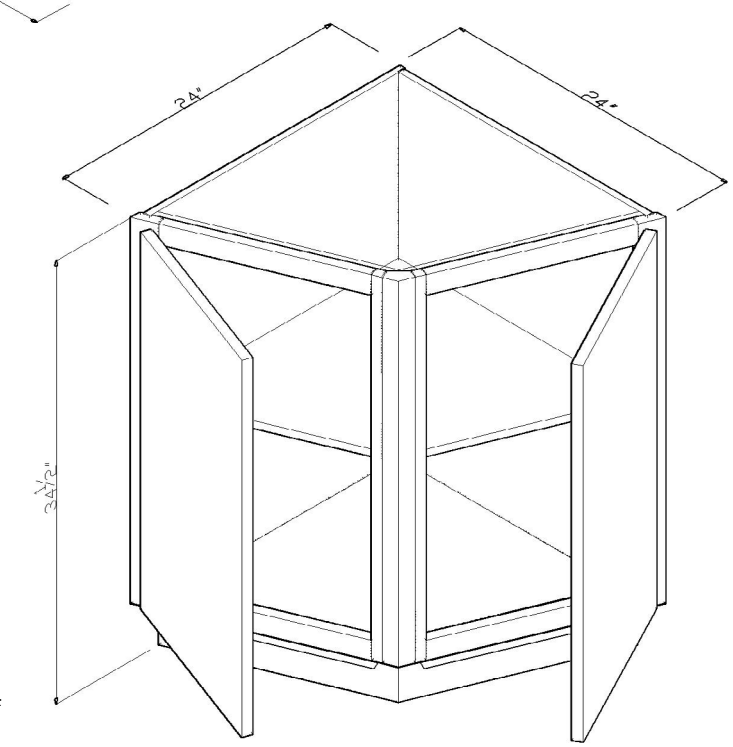

BC24

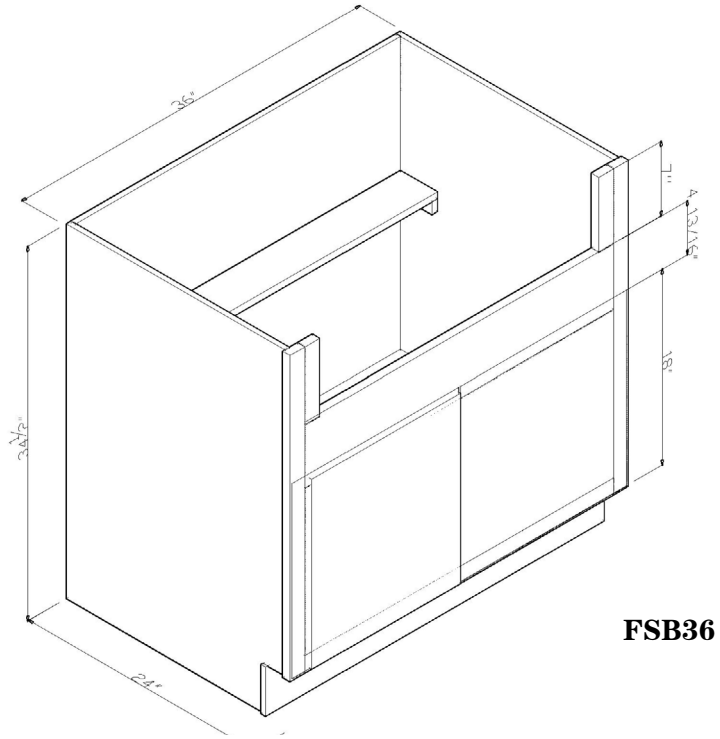

FSB36

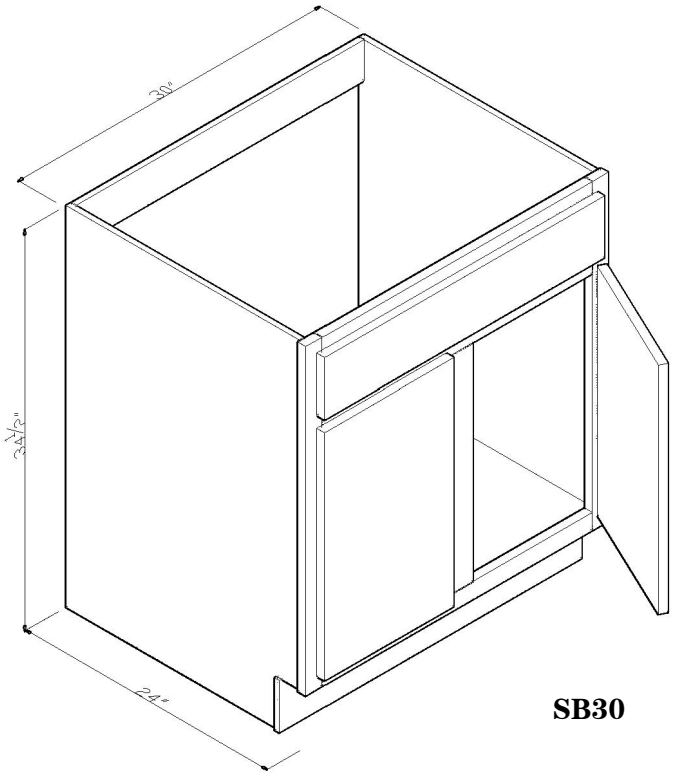

SB30

cabinet SKU's vary per cabinet style

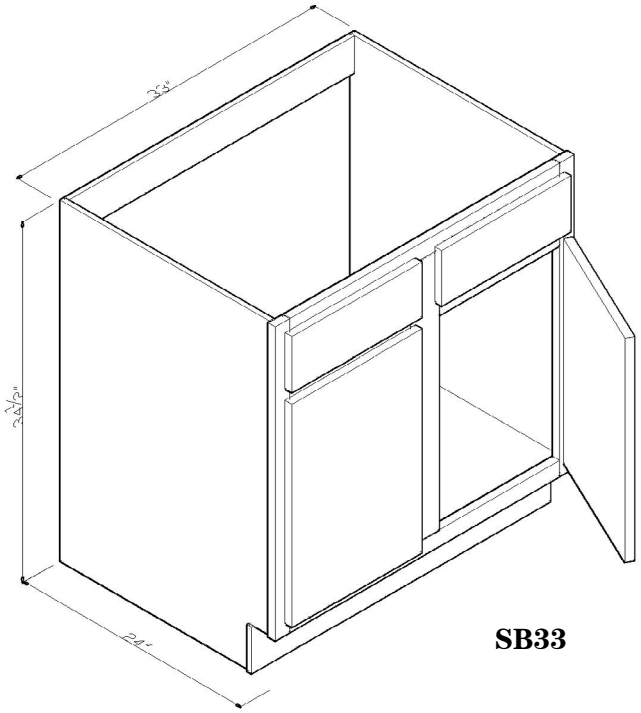

SB33

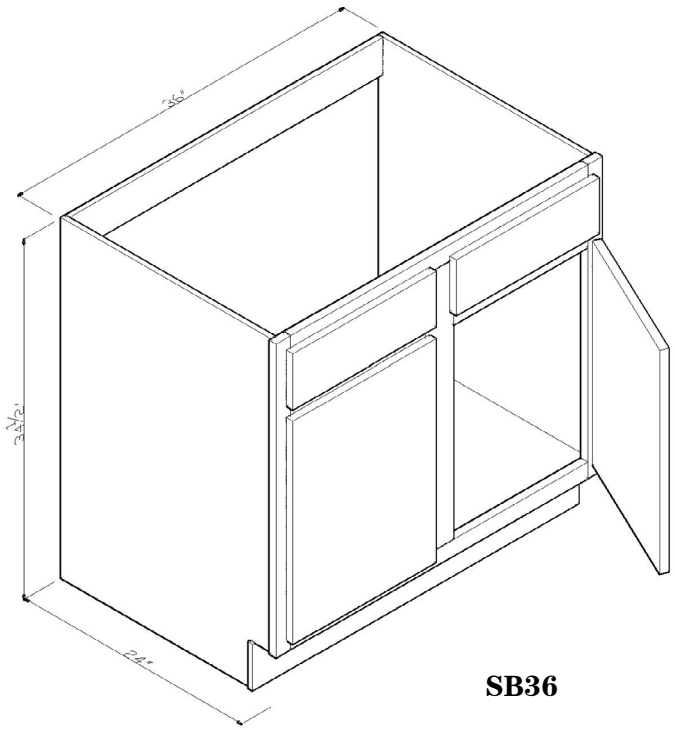

SB36

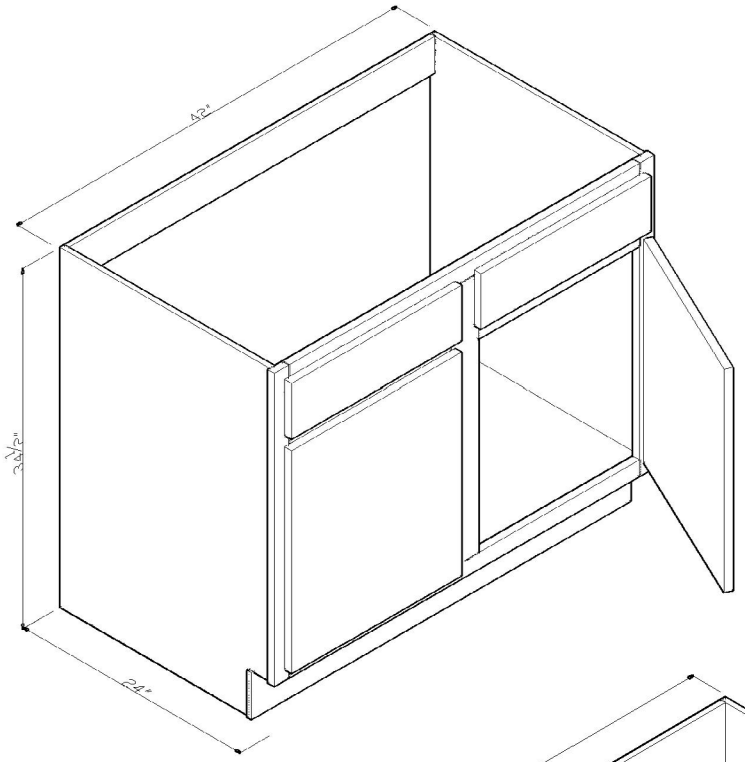

SB42

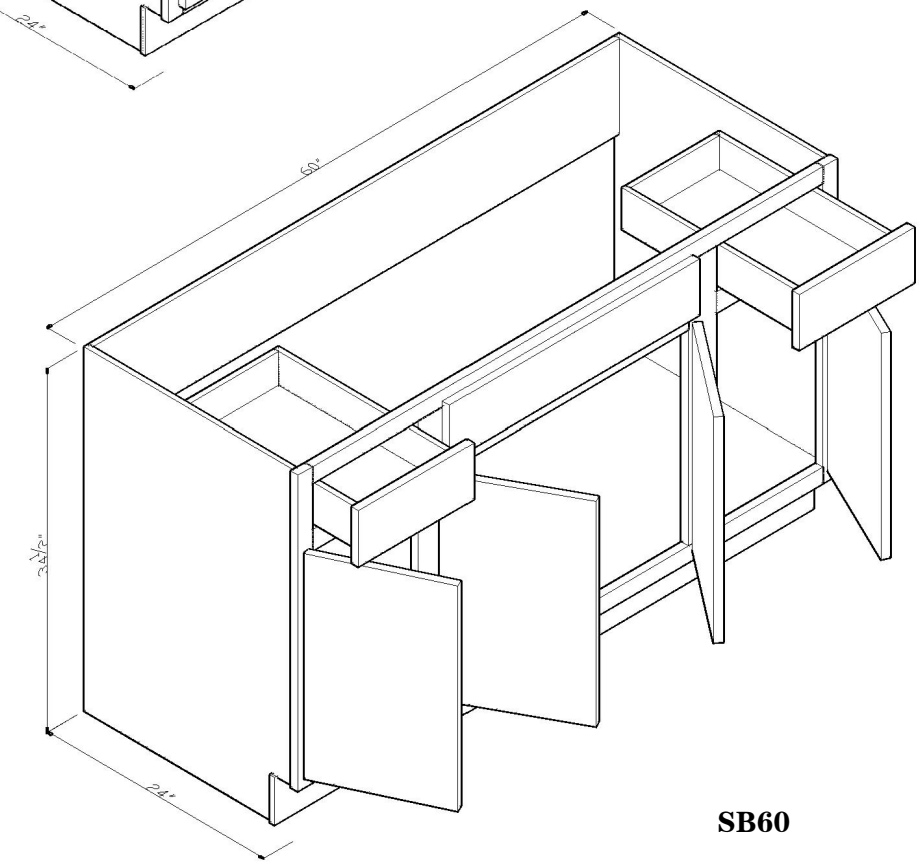

SB60

cabinet SKU's vary per cabinet style

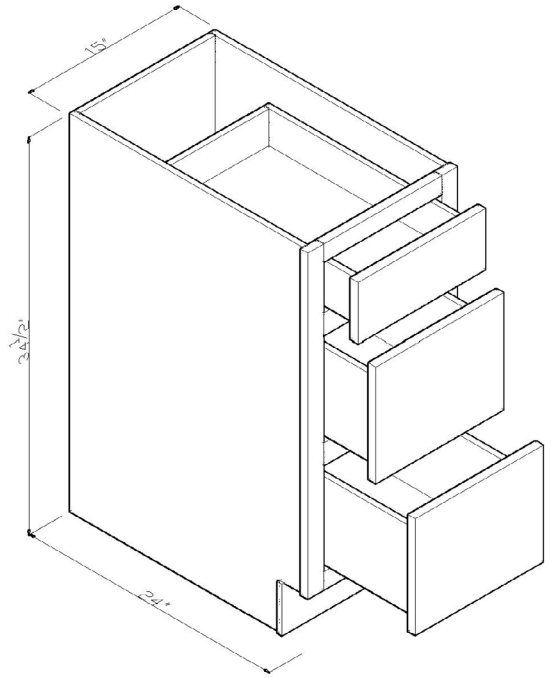

DB15

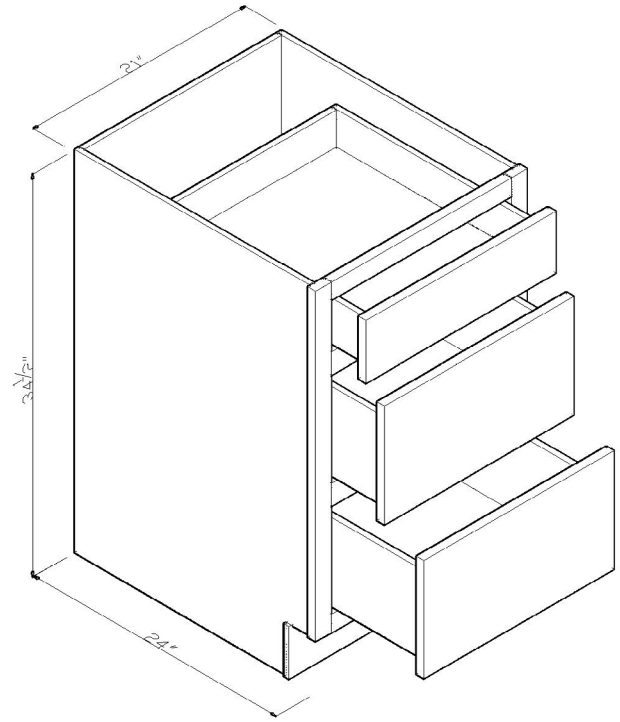

DB21

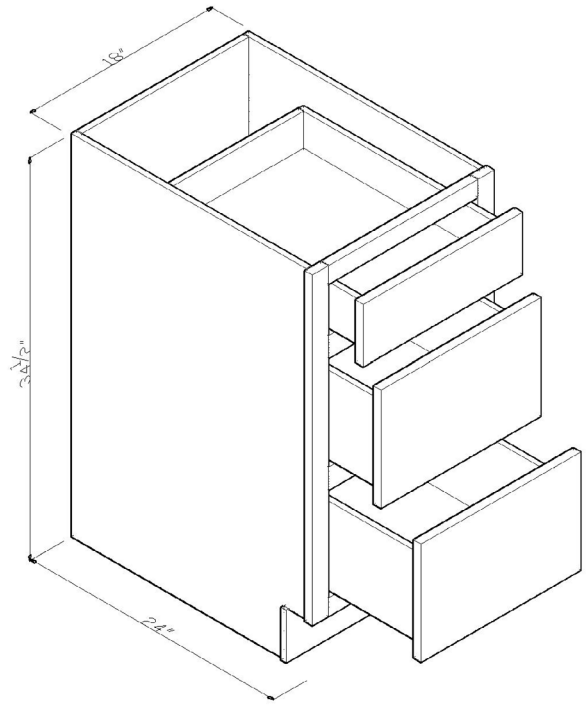

DB18

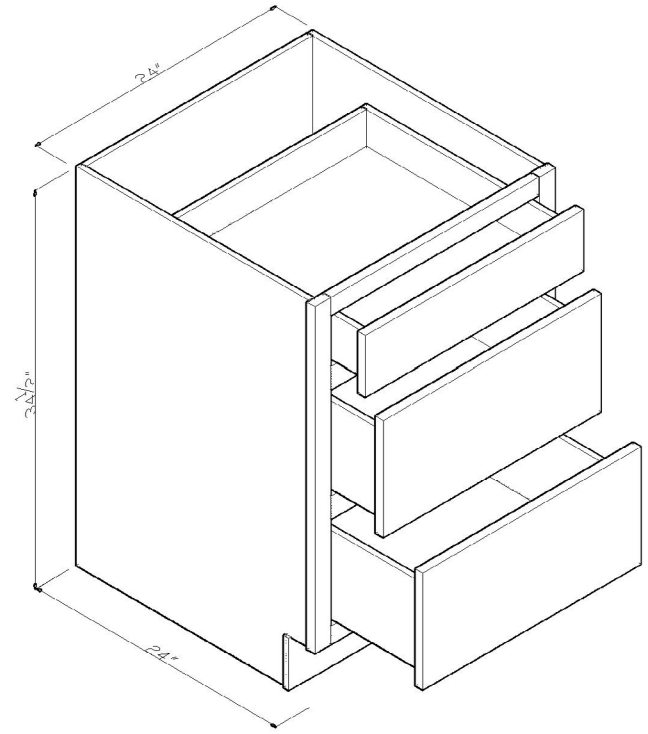

DB24

cabinet SKU's vary per cabinet style

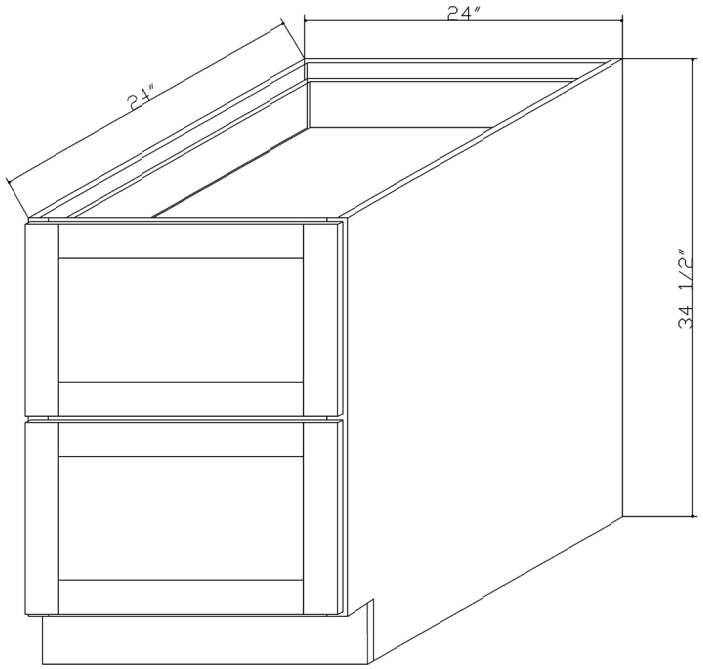

DB24–2

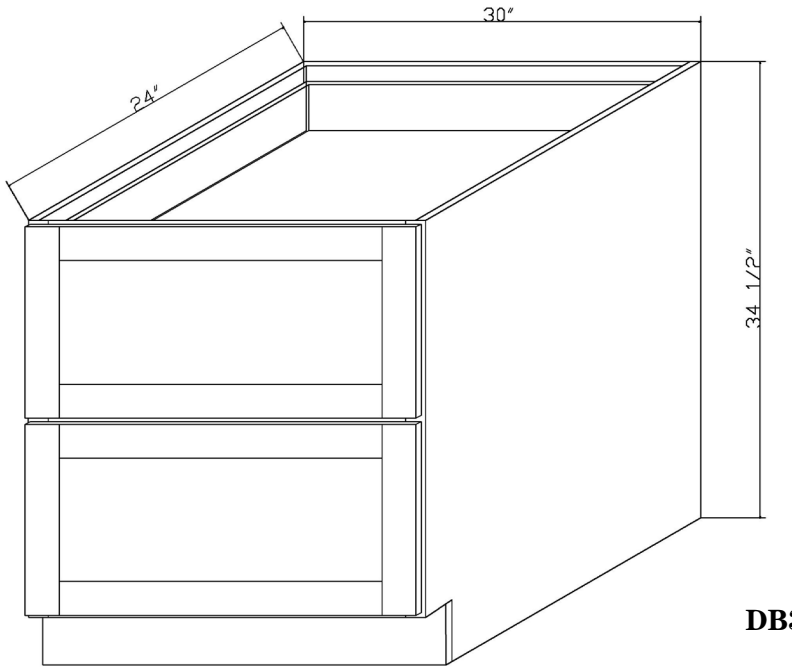

DB30–2

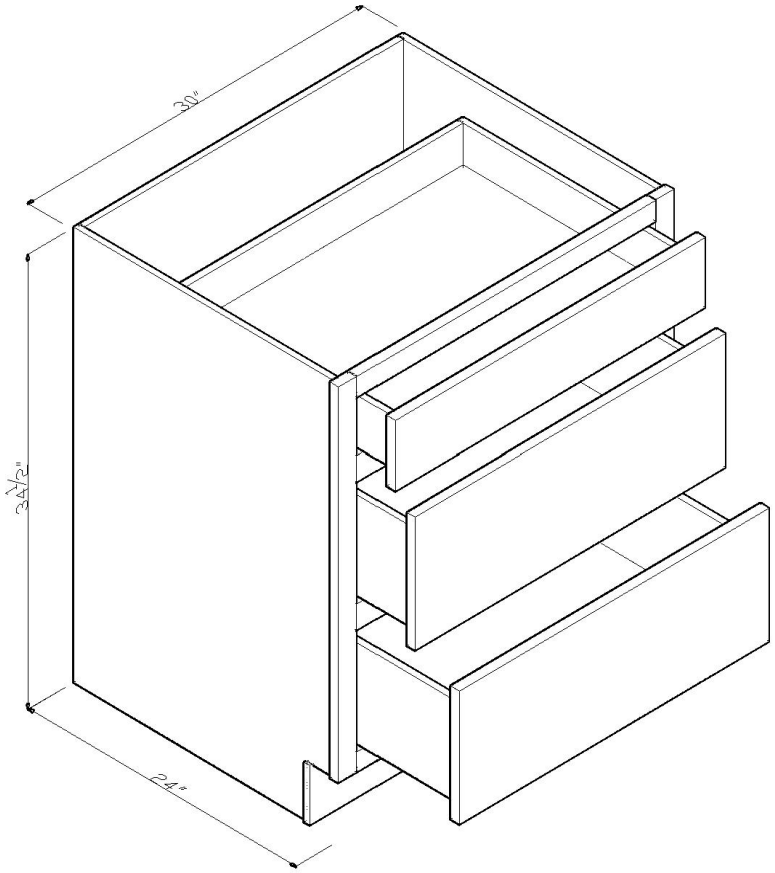

DB30

cabinet SKU's vary per cabinet style

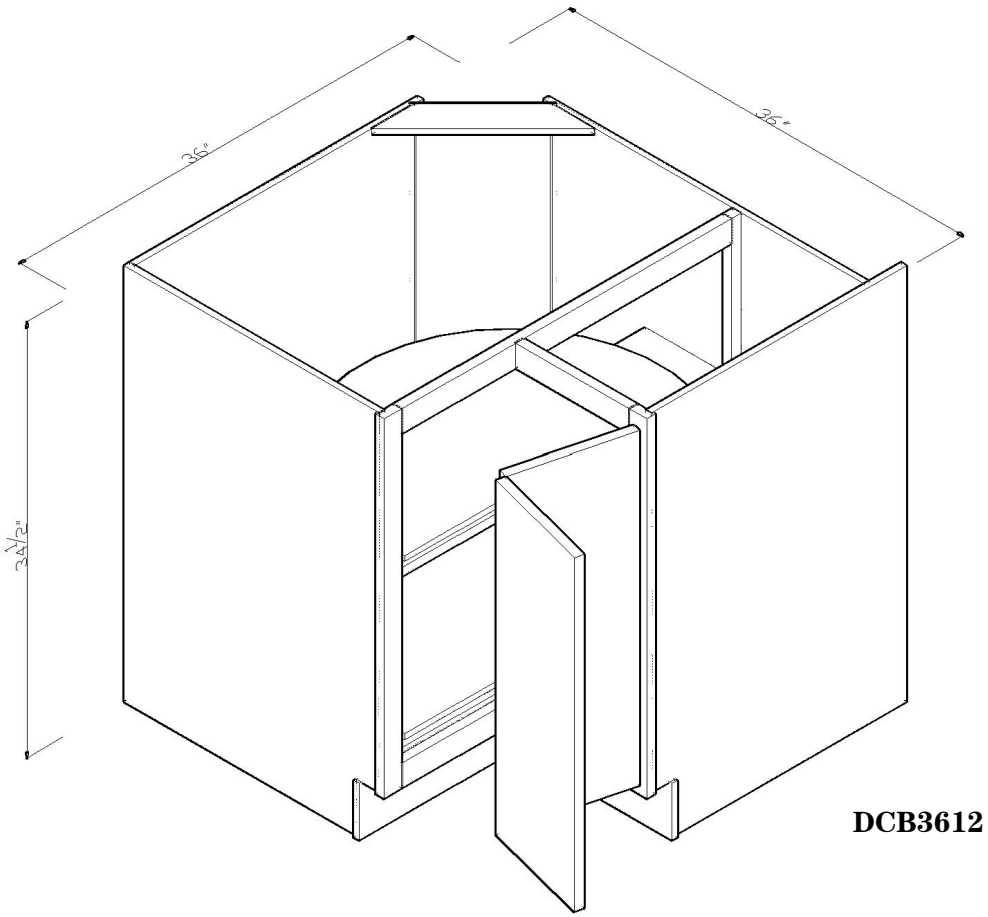

DCB3612

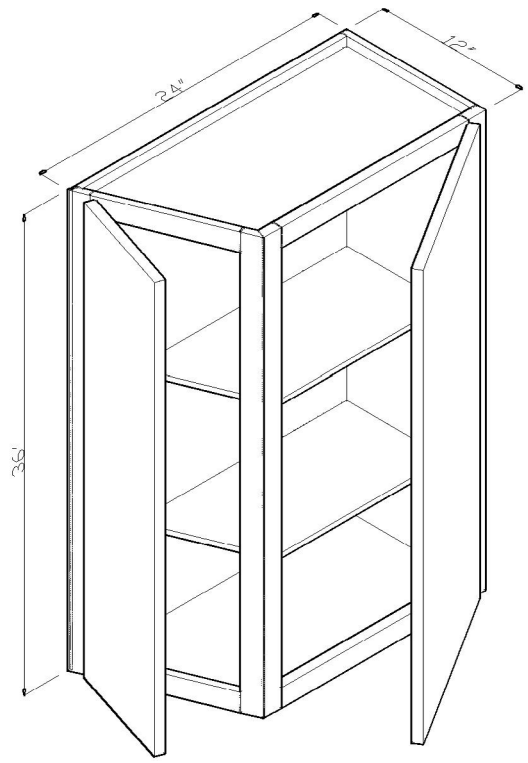

WAC2436

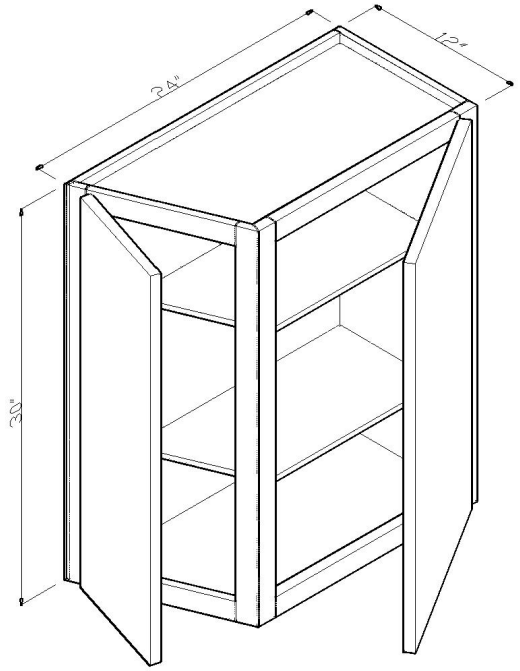

WAC2430

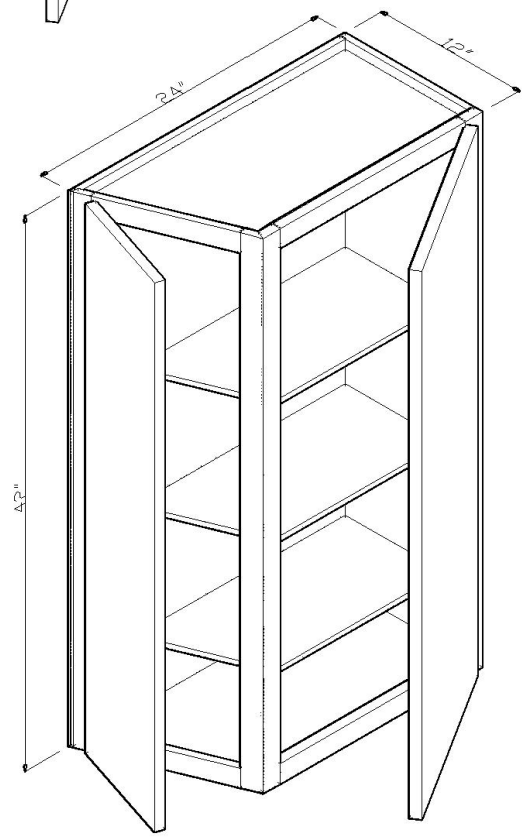

WAC2442

cabinet SKU's vary per cabinet style

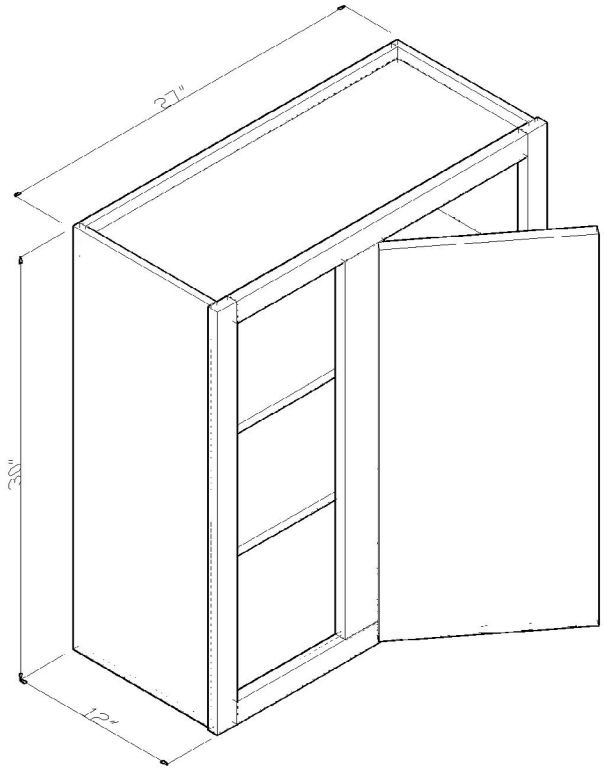

WBC2730

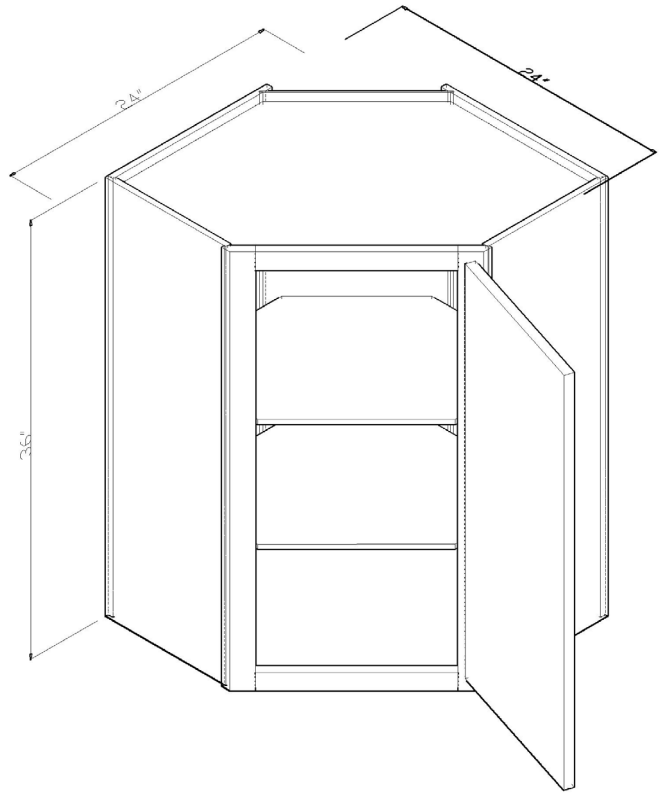

WDC2436

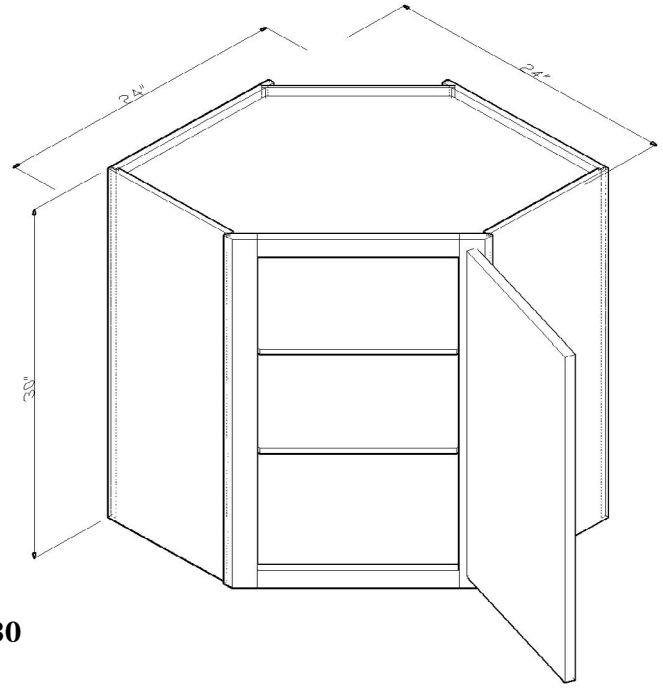

WDC2430

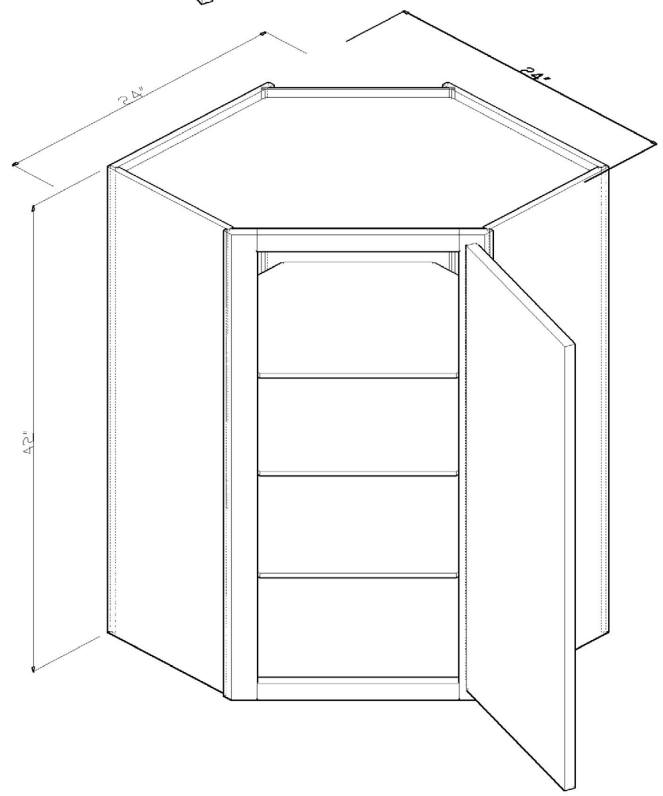

WDC2442

WDC2736

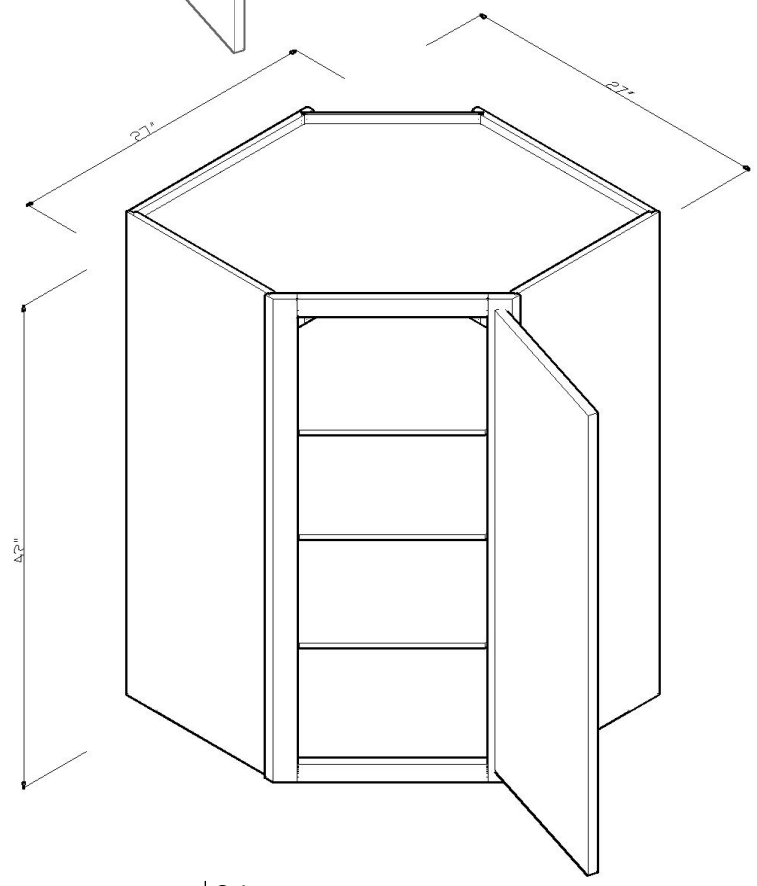

WDC2742

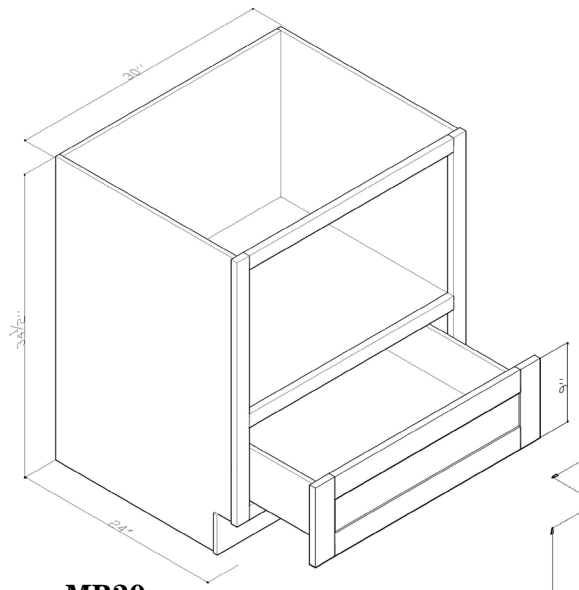

MB30

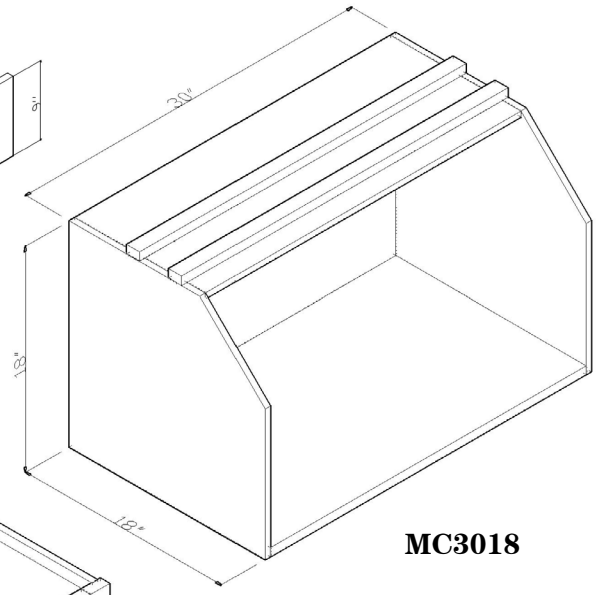

MC3018

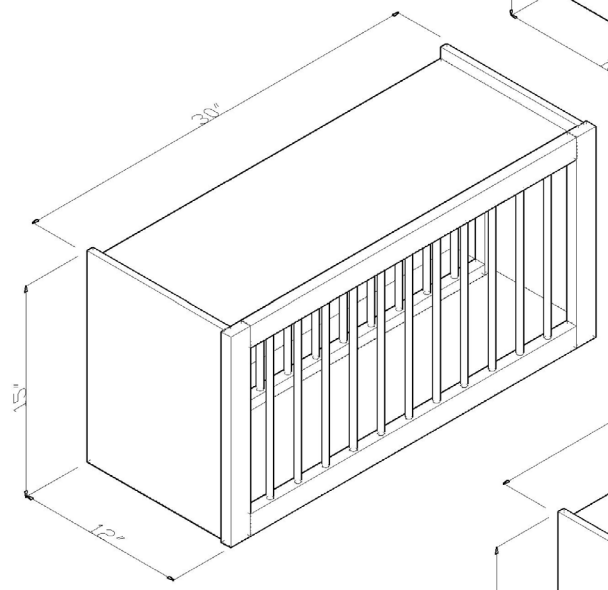

PR3015

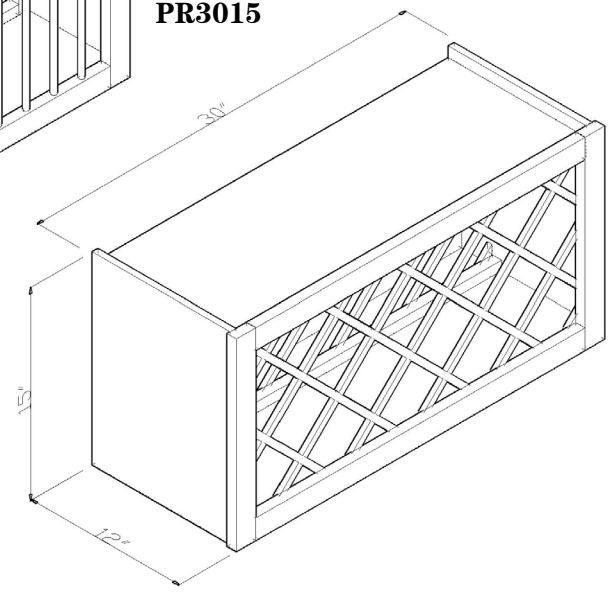

WR3015

cabinet SKU's vary per cabinet style

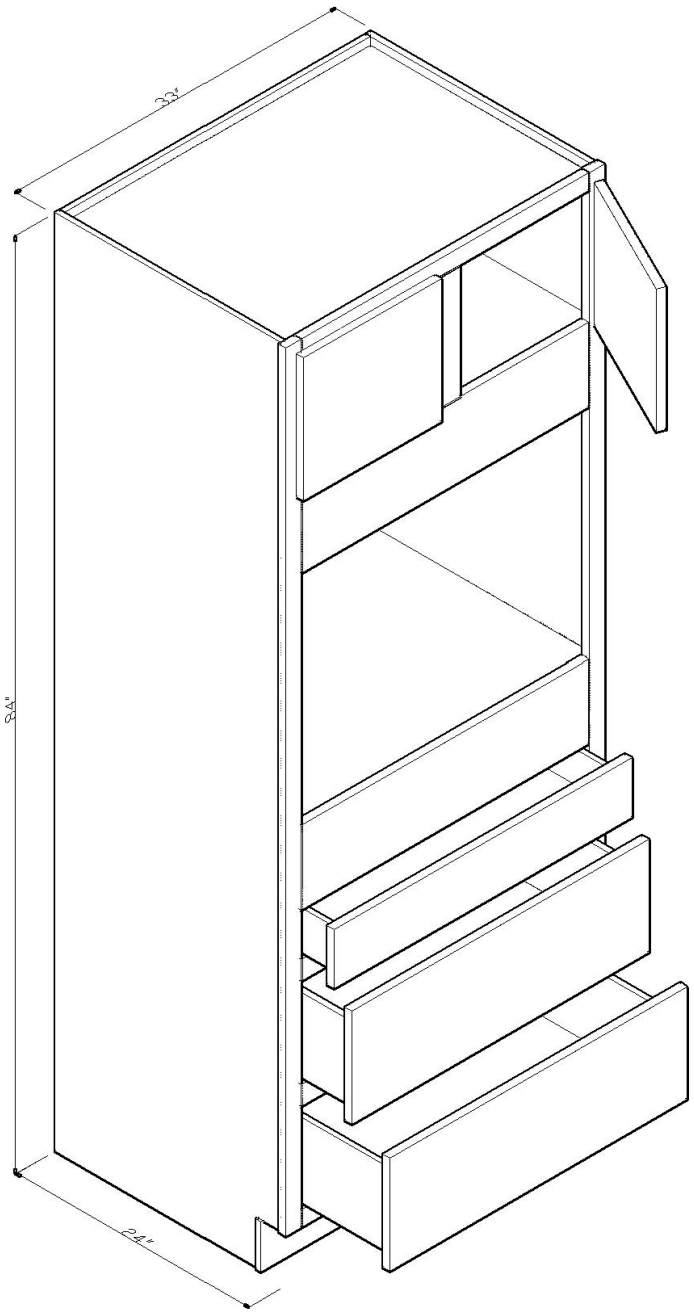

OU332484

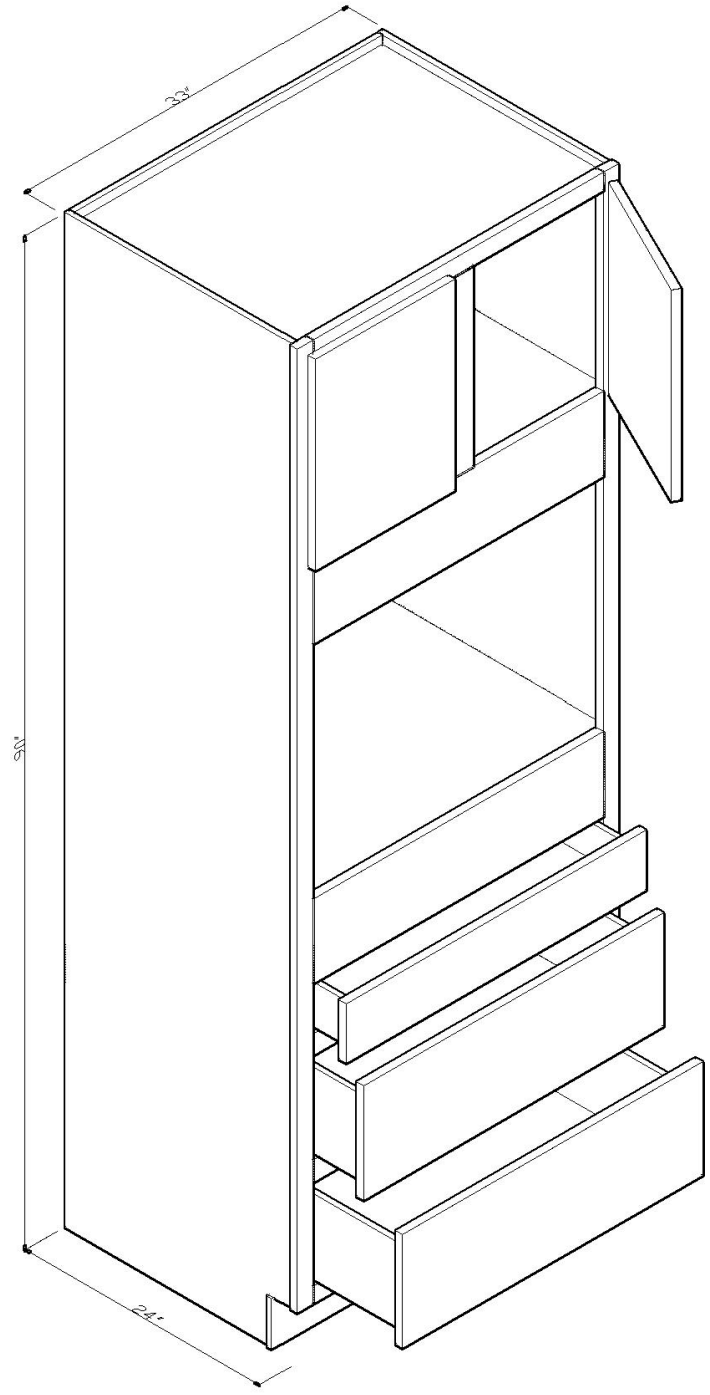

OU332490

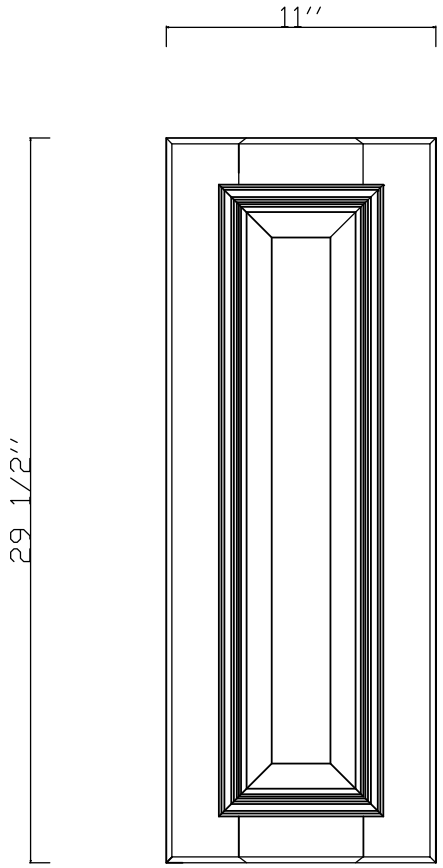

30DD

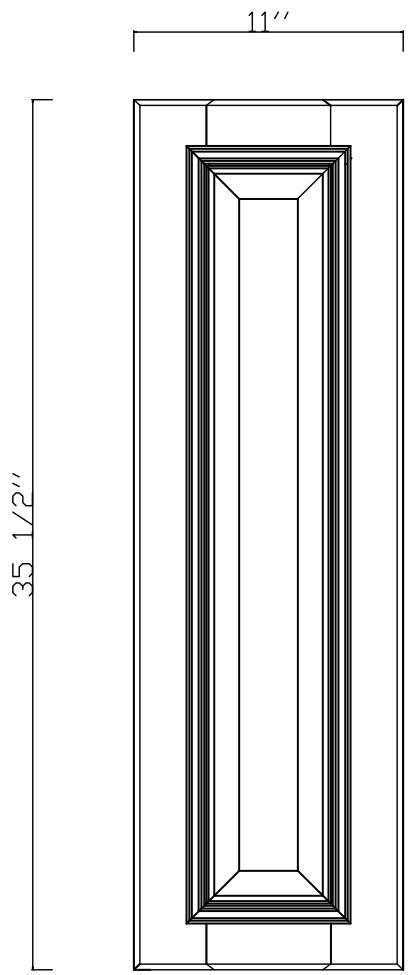

36DD

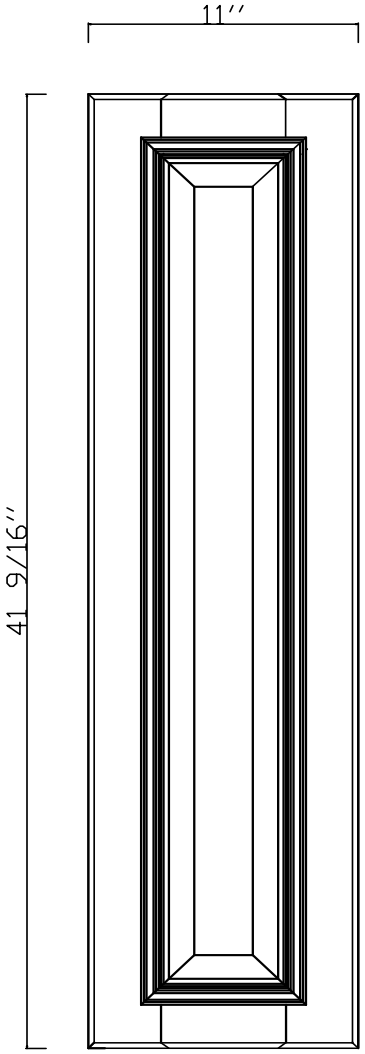

42DD

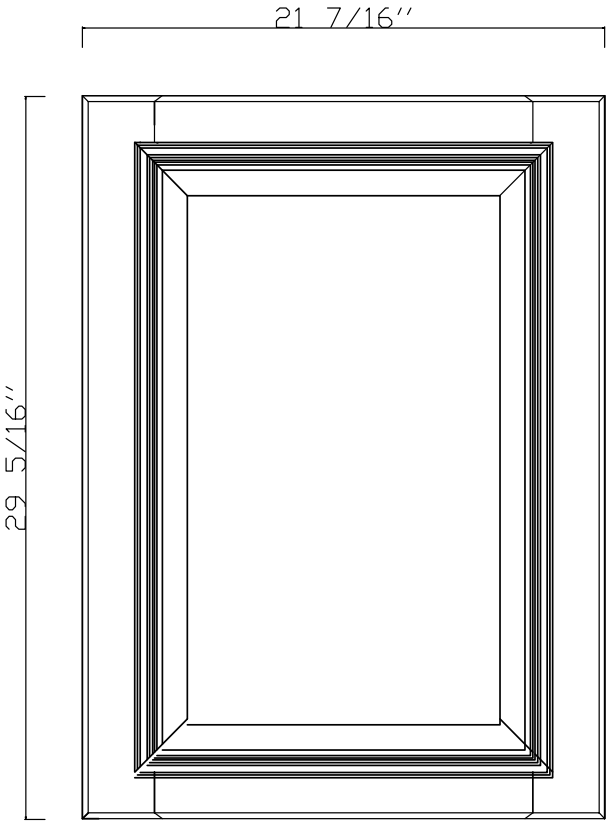

BDD

cabinet SKU's vary per cabinet style

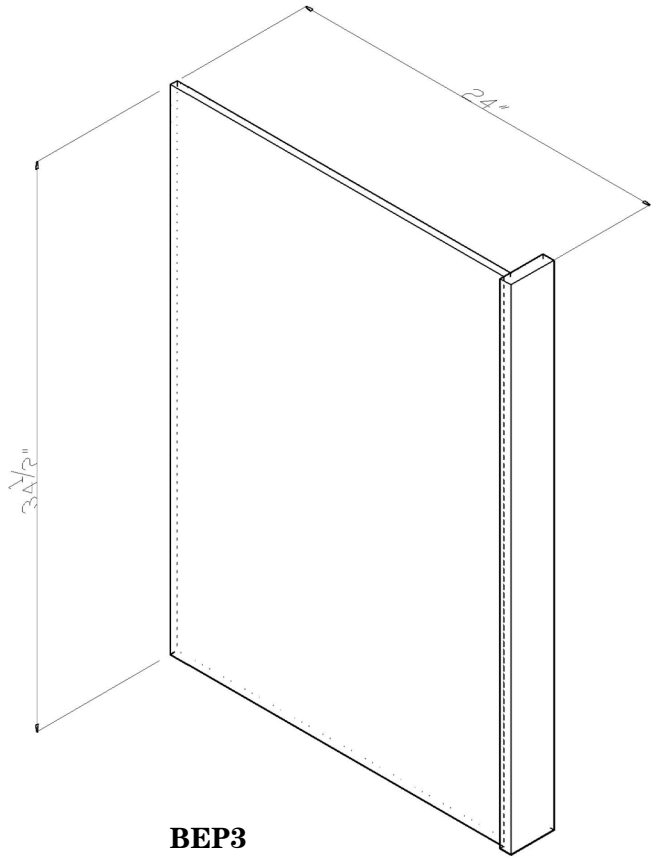

BEP3

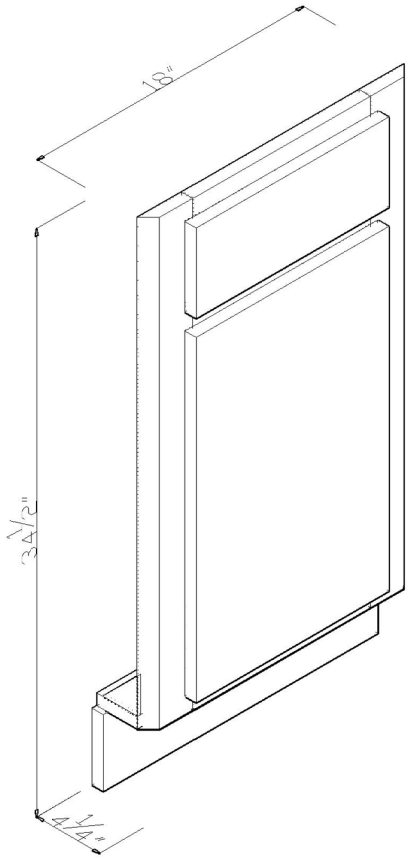

CSF36

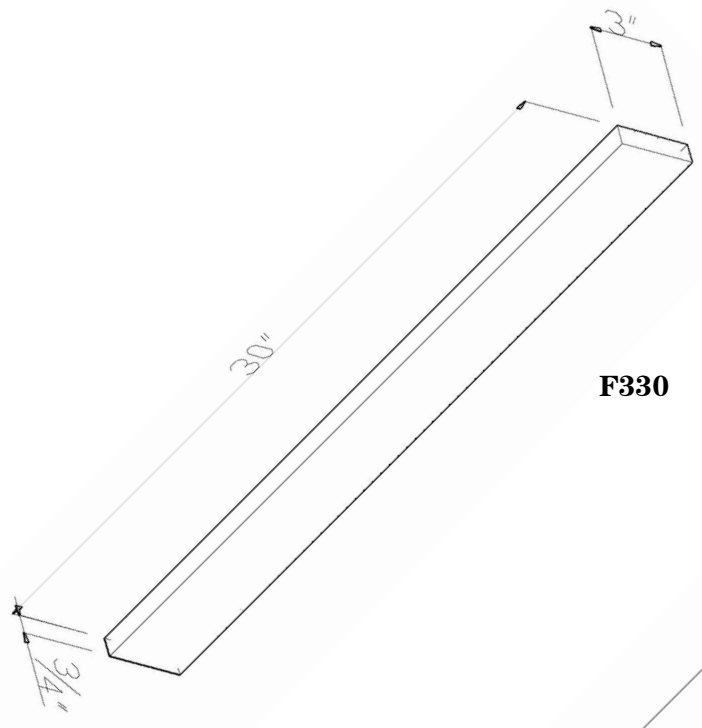

F330

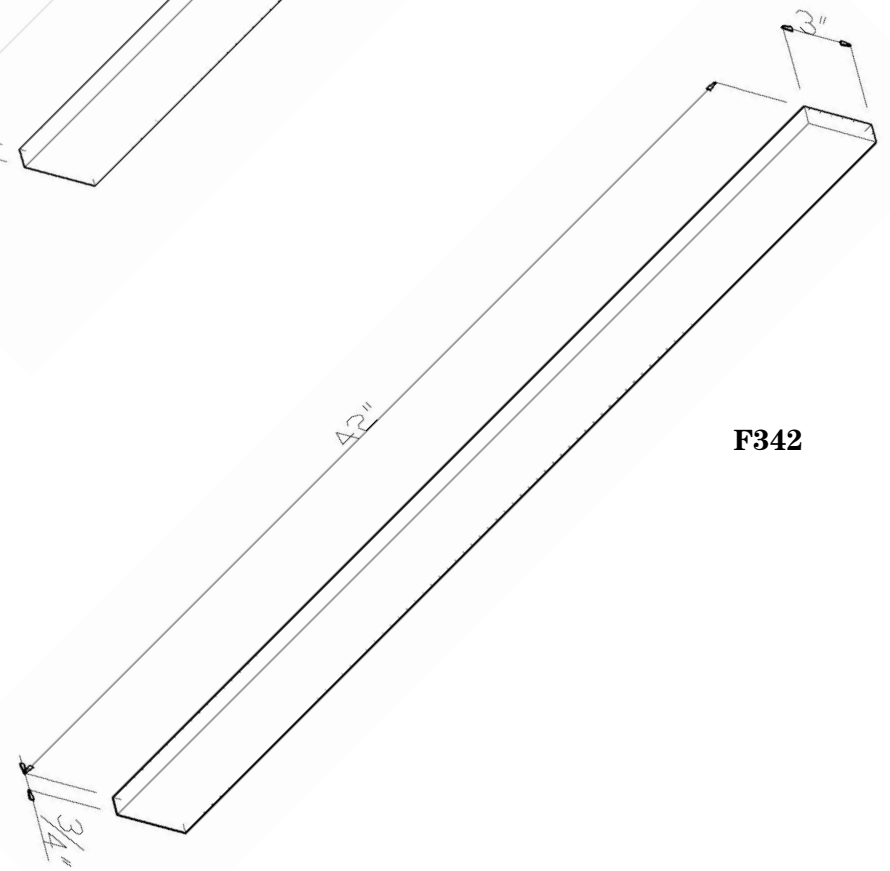

F342

cabinet SKU's vary per cabinet style

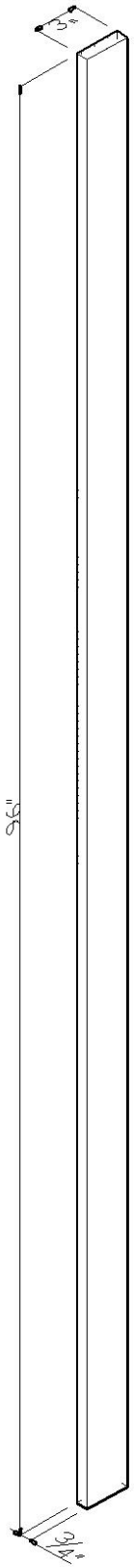

F396

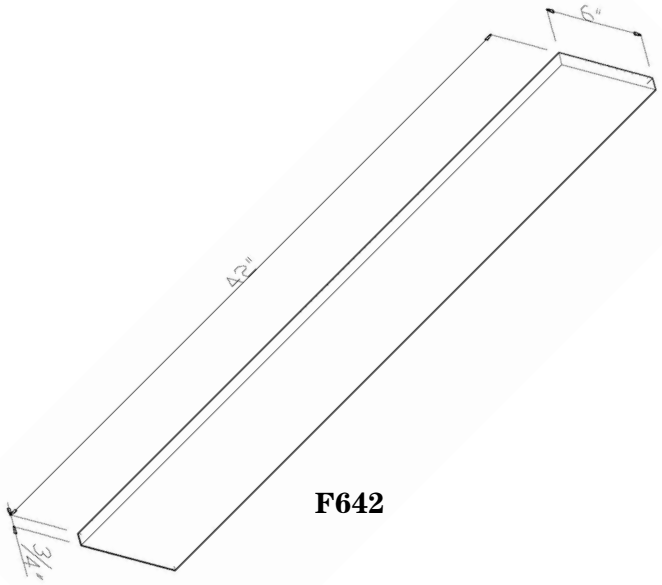

F642

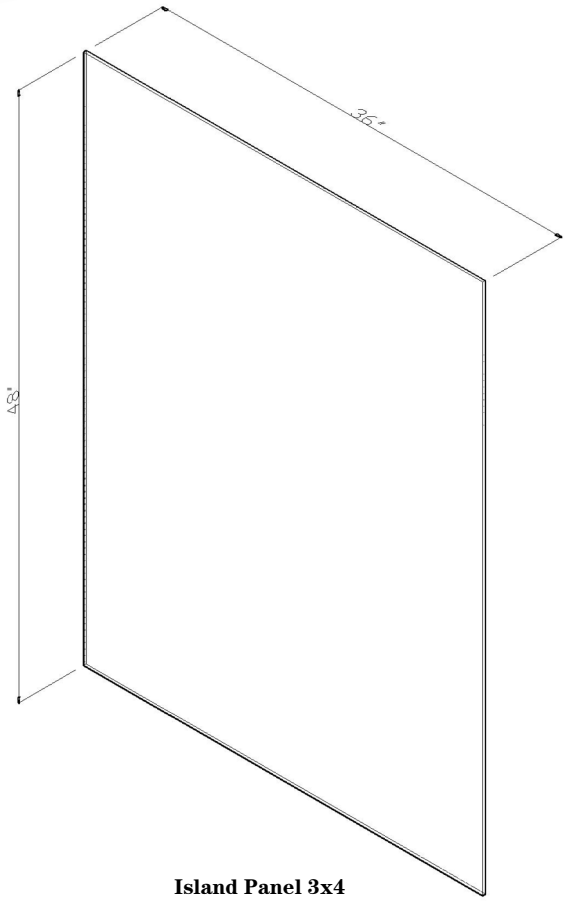

Island Panel 3x4

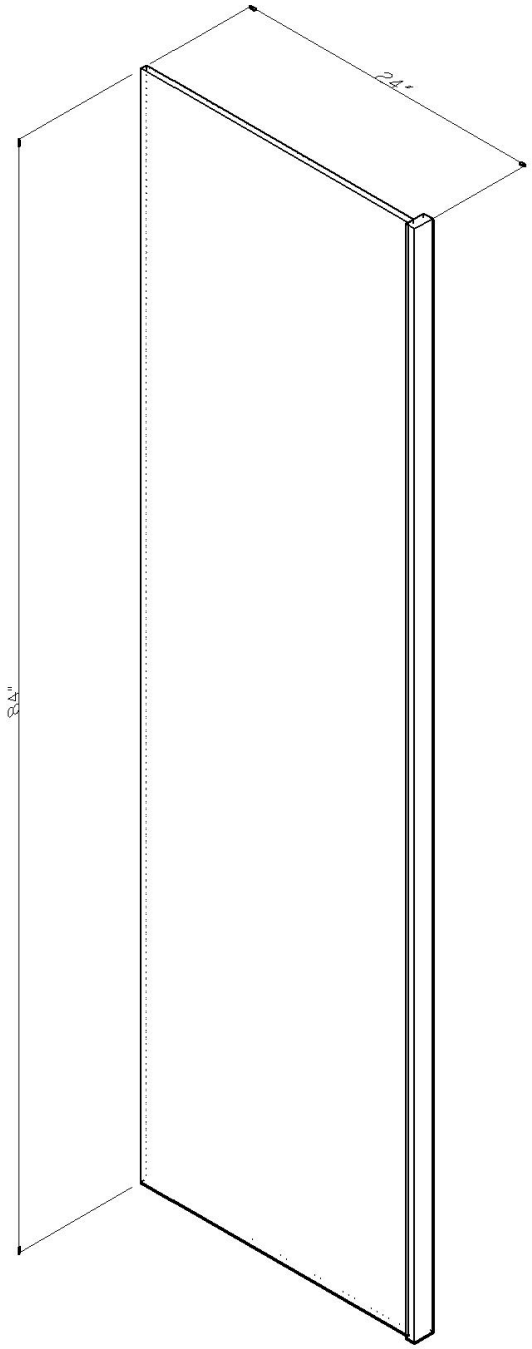

RP84

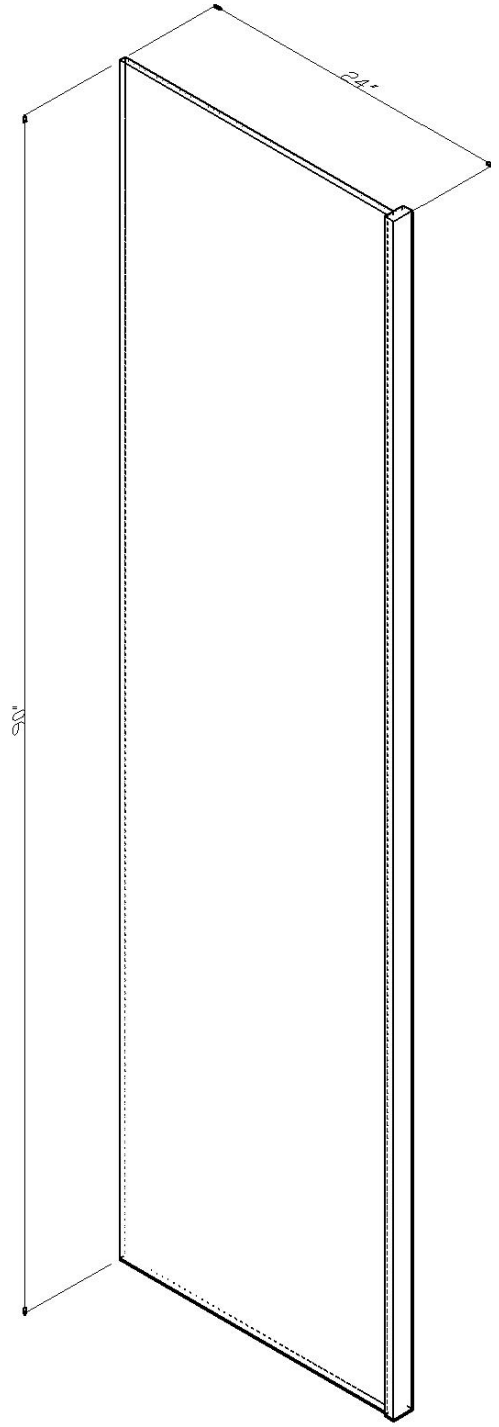

RP90

cabinet SKU's vary per cabinet style

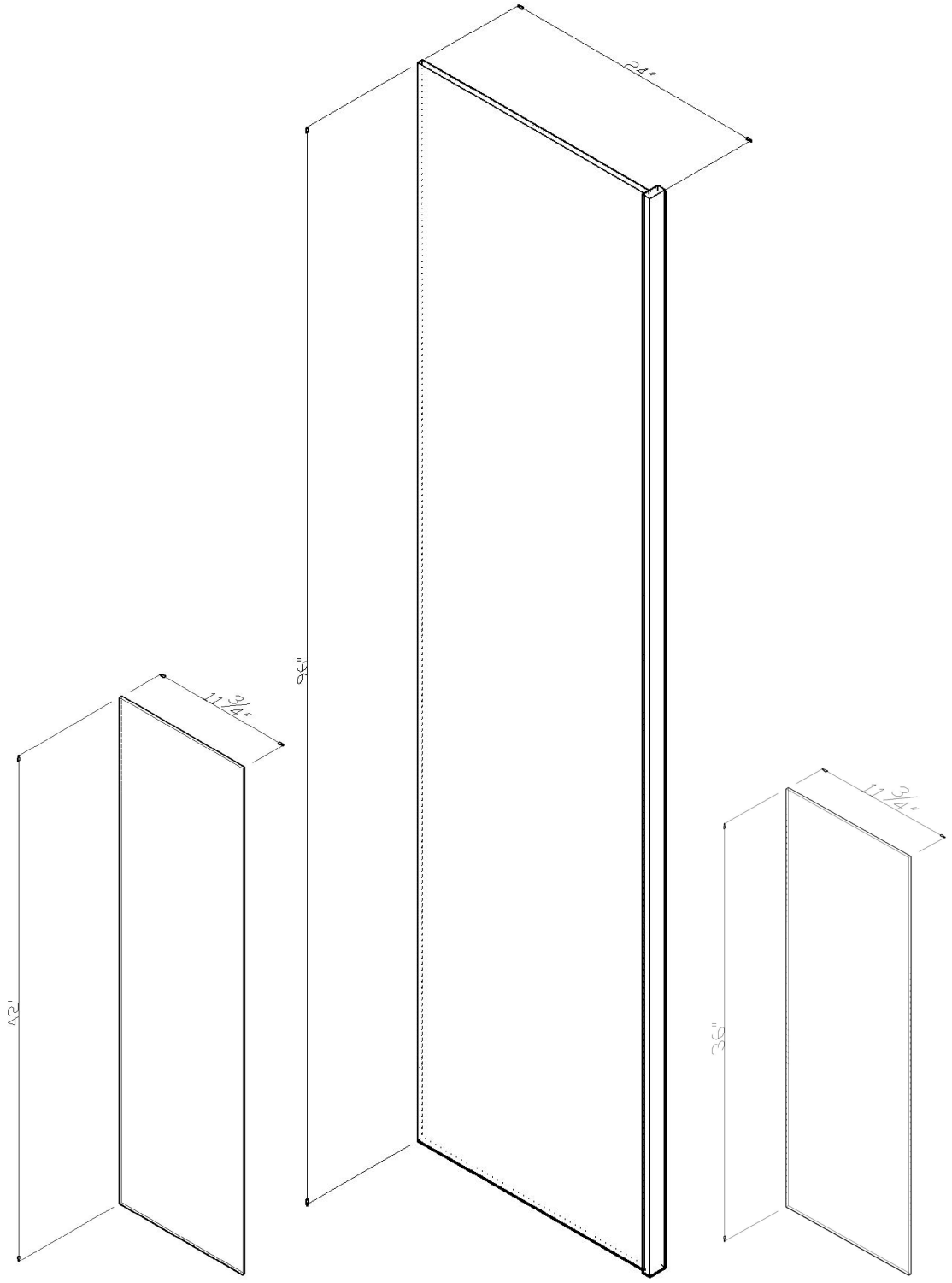

Wall End Panel 12x42 **RP96** **Wall End Panel 12x36**

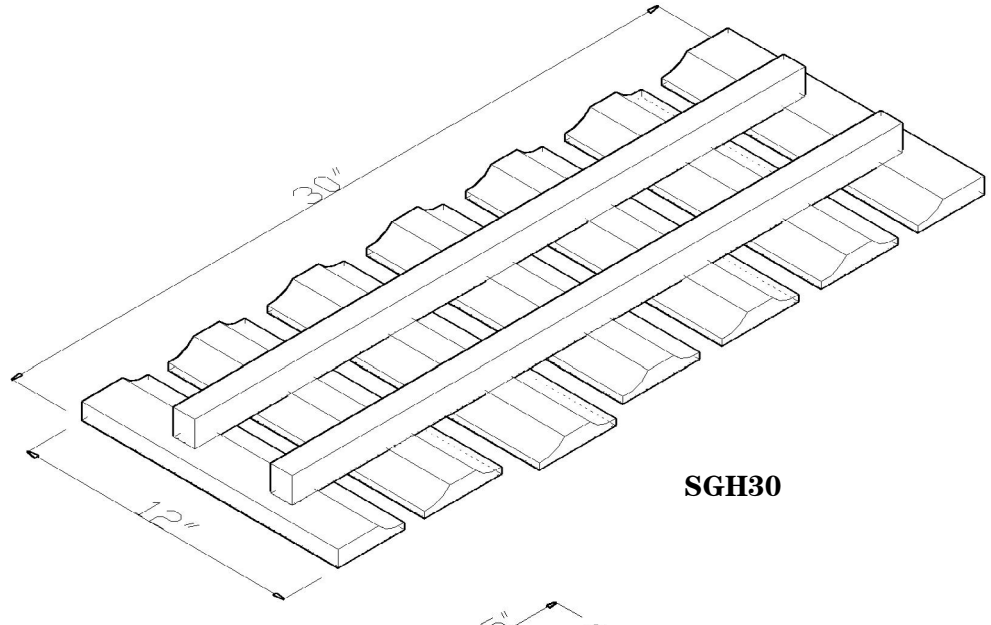

SGH30

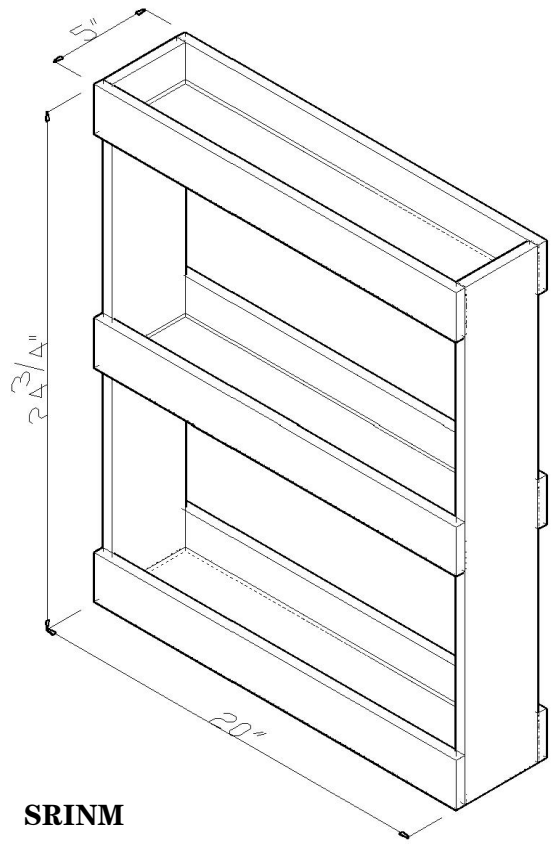

SRINM

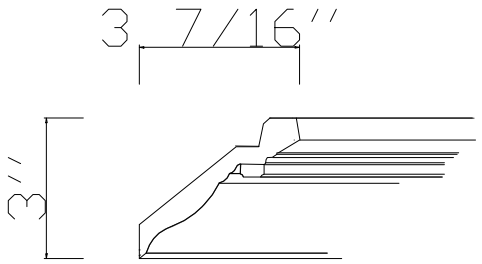

CM8+DM8

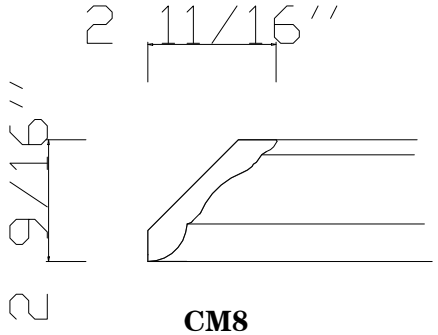

CM8

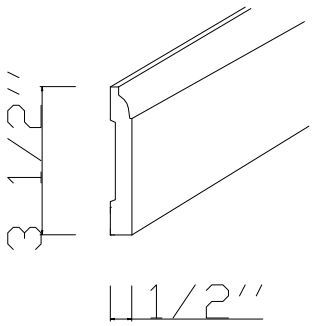

FBM8

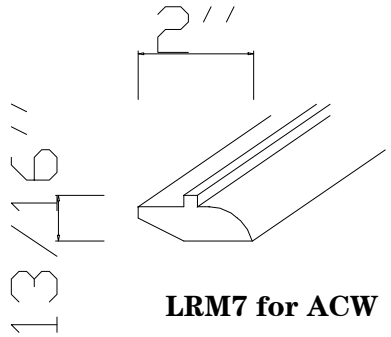

LRM7 for ACW

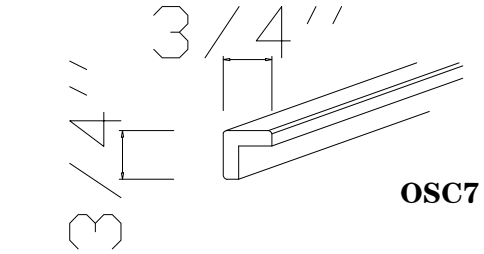

OSC7

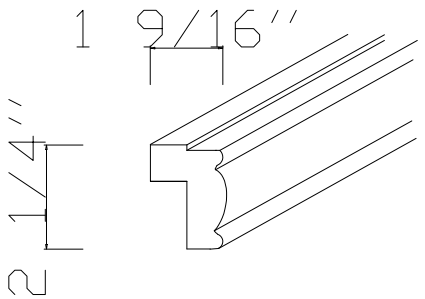

LRM7 for NTL

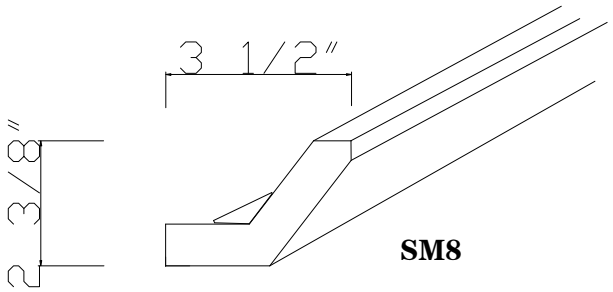

SM8

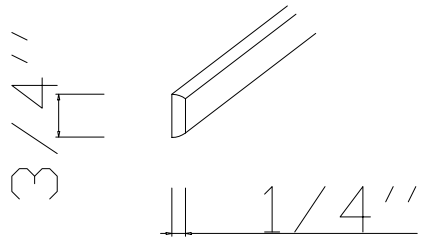

SCM7

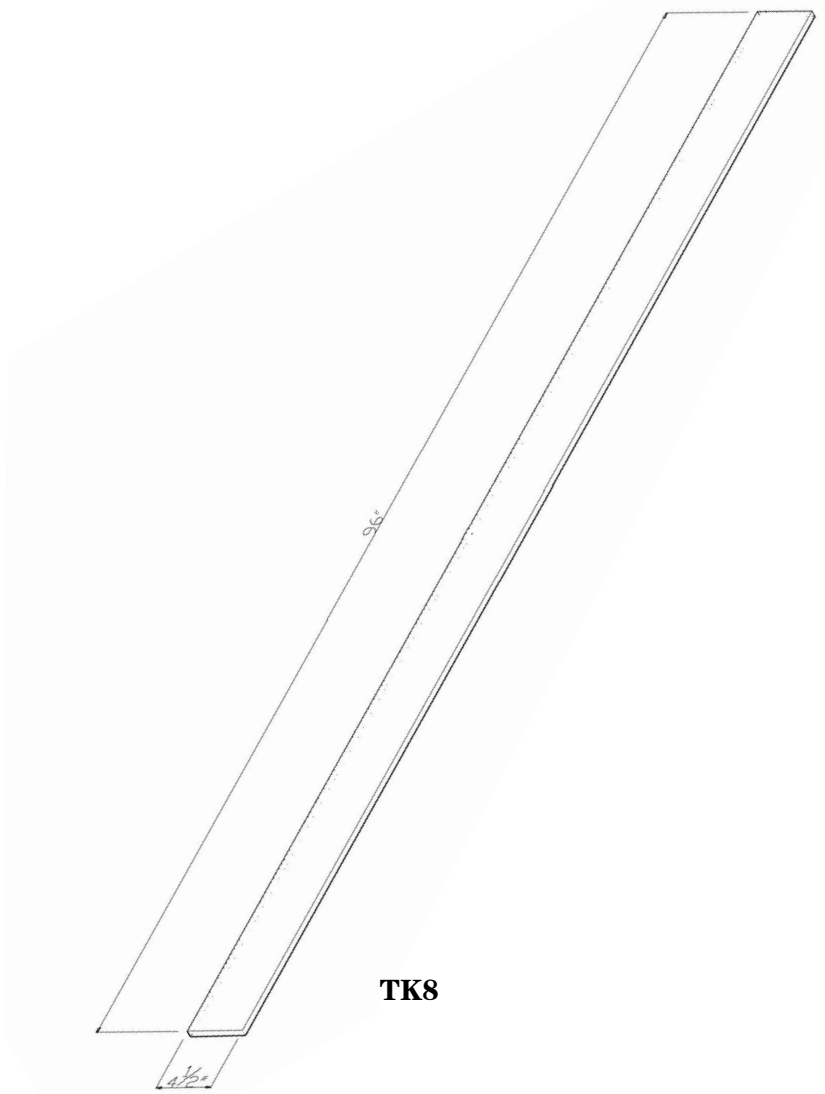

TK8

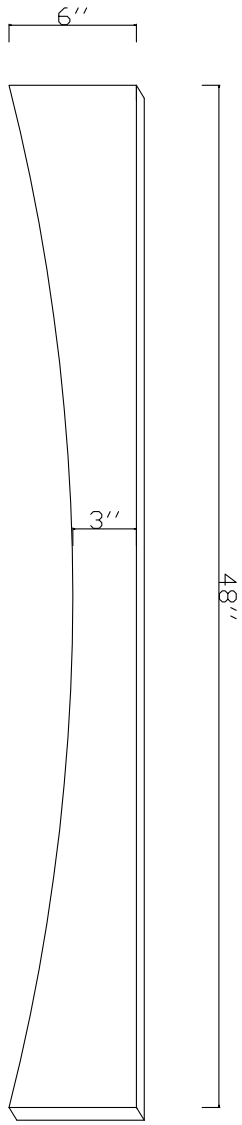

VAR48

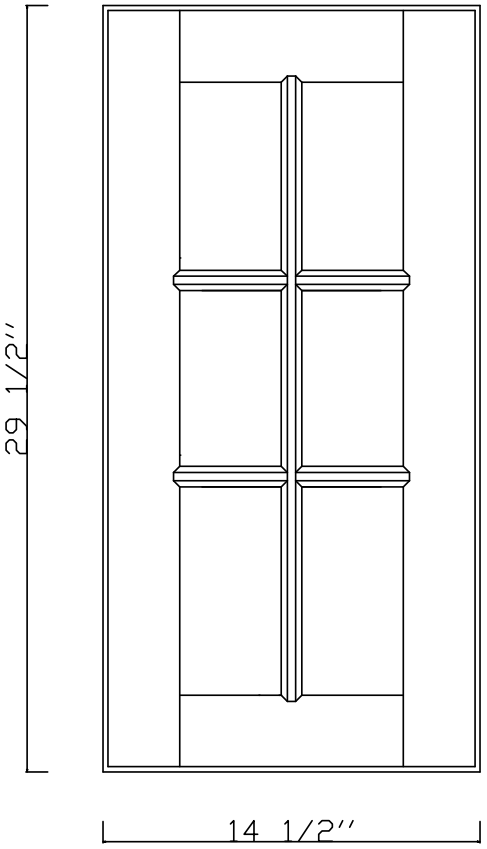

W1530
WDC2430

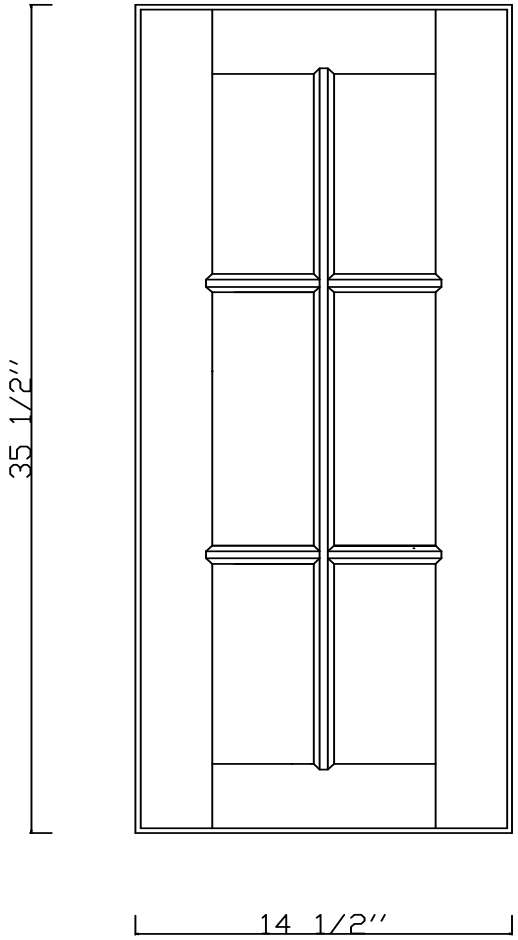

W1536
WDC2436
WDC2736

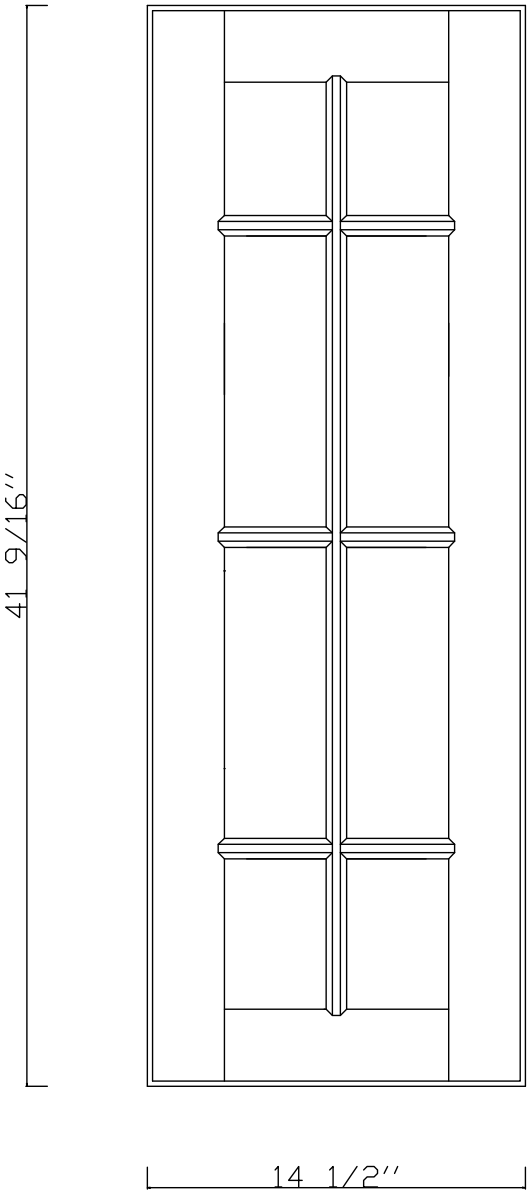

W1542MD
WDC2442
WDC2742

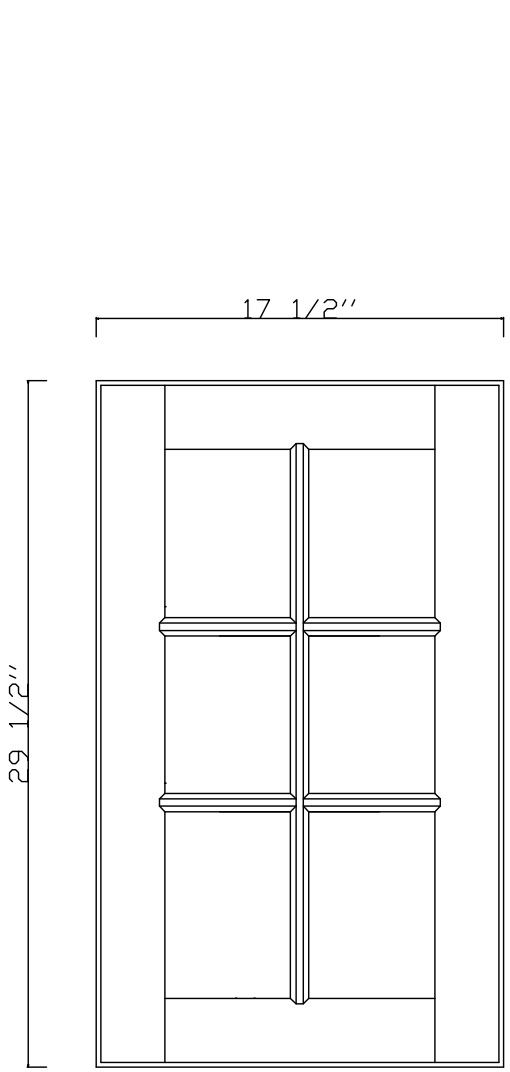

W1830

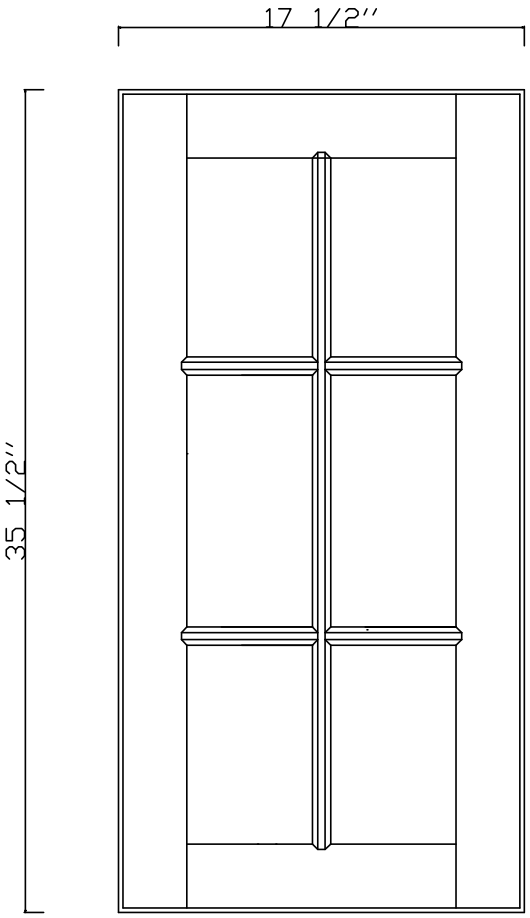

W1836

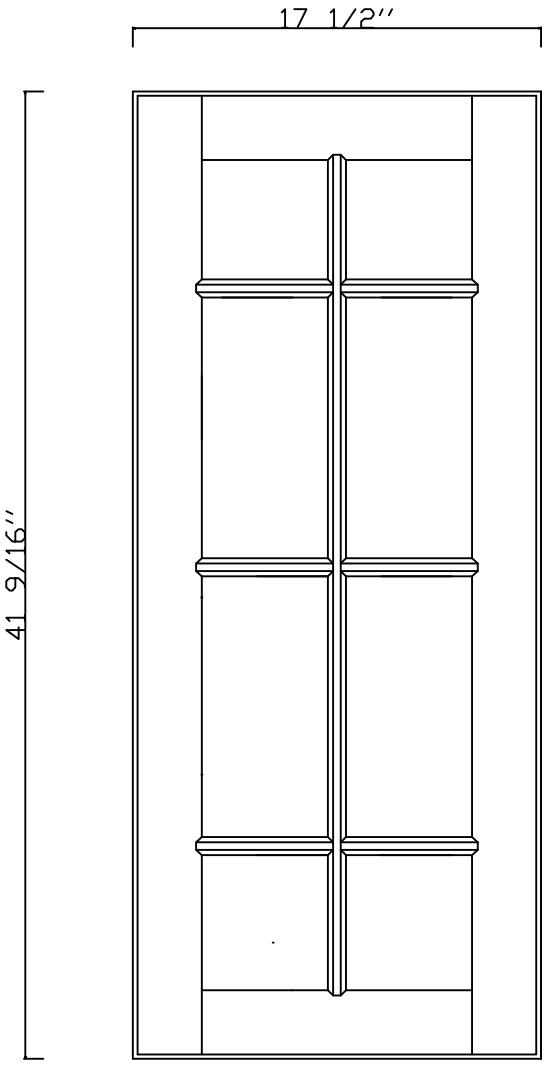

W1842

cabinet SKU's vary per cabinet style

www.ghicabinets.com

version 2019