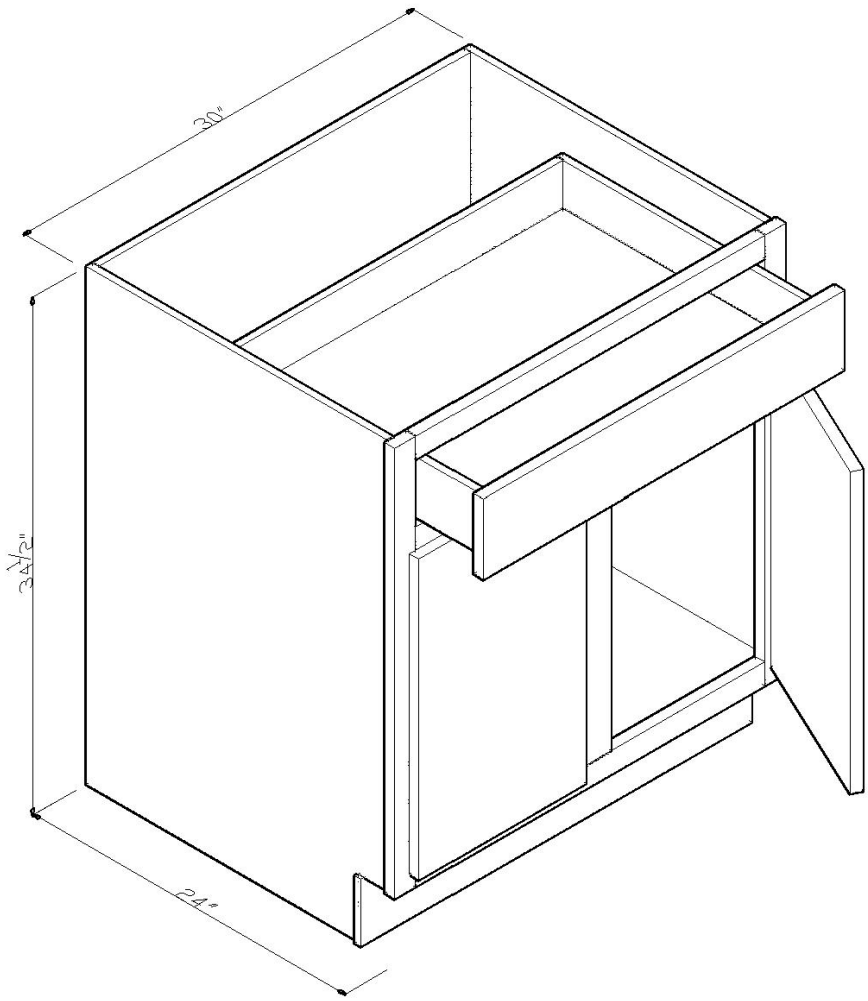

B30