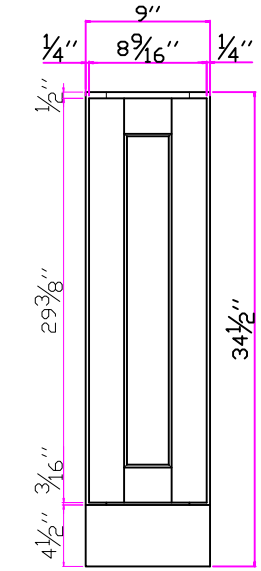

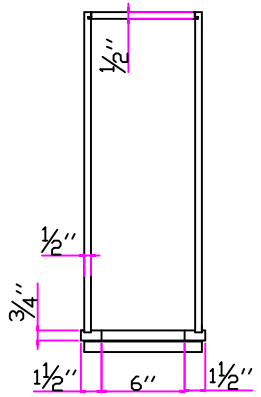

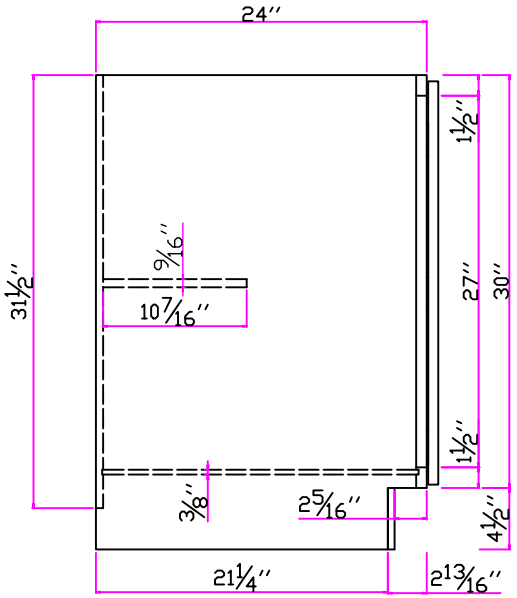

REVISIONS

GHI Custom Cabinetry

PCG

B09-FH

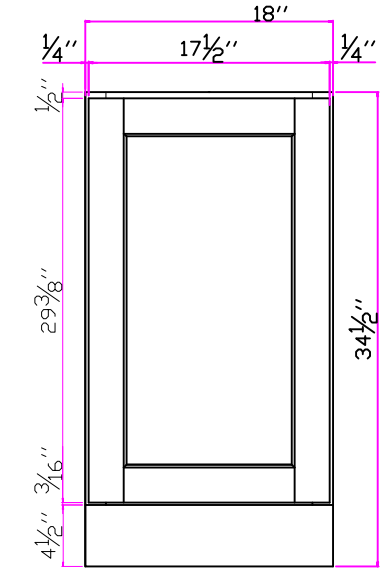

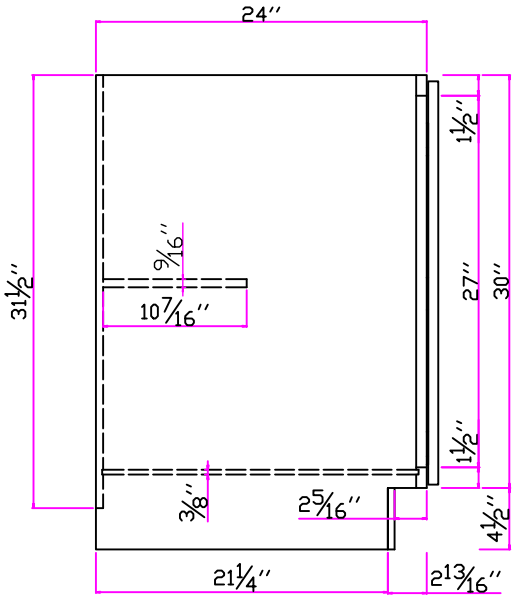

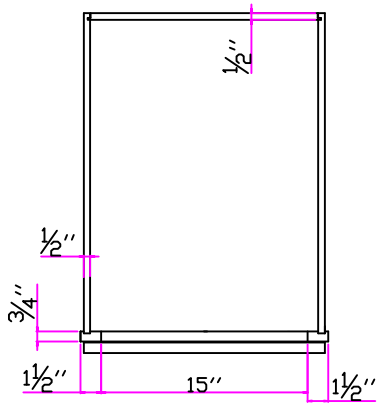

REVISIONS

PCG

B18-FH

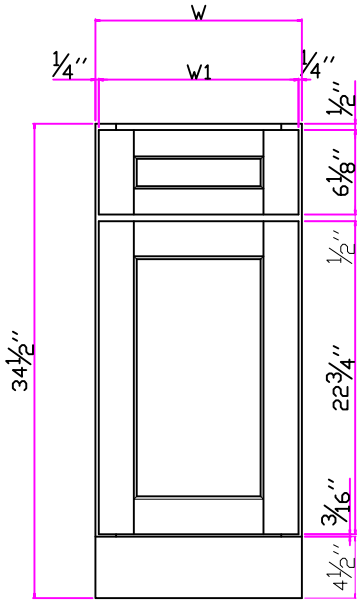

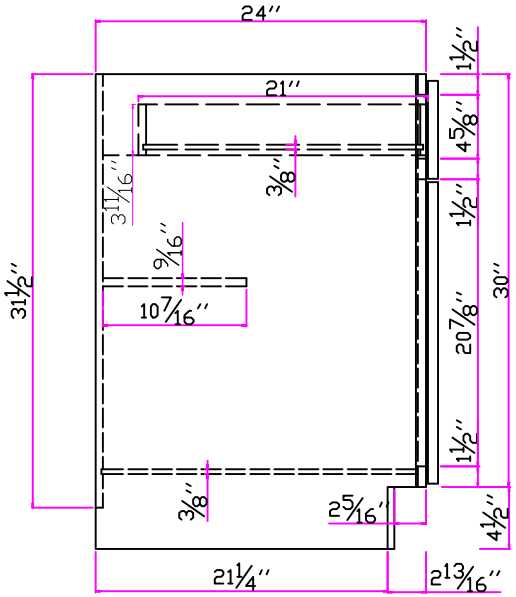

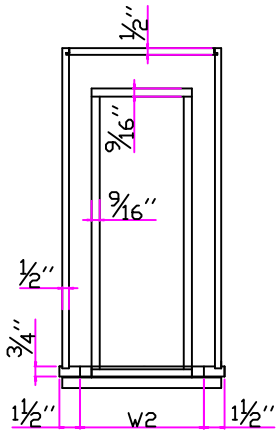

REVISIONS

PCG

B12-B21

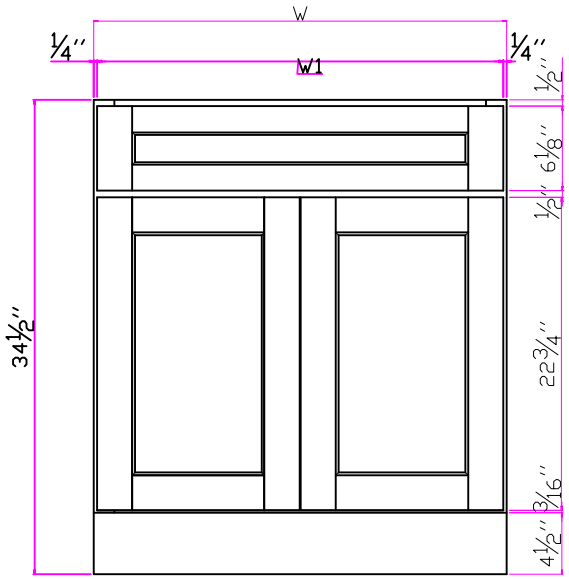

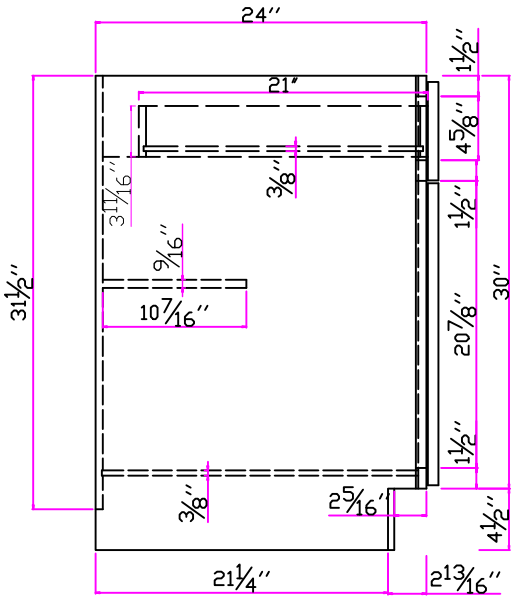

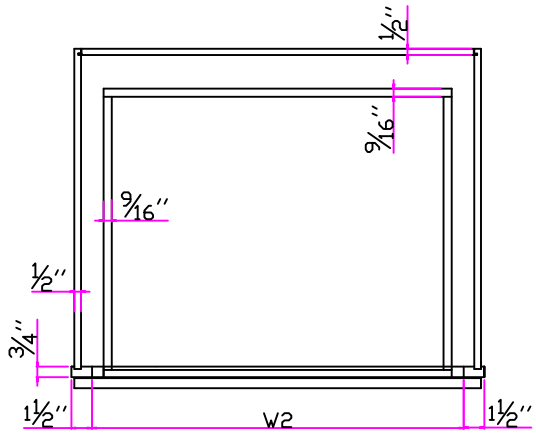

REVISIONS

GHI Custom Cabinetry

PCG

B24-B30

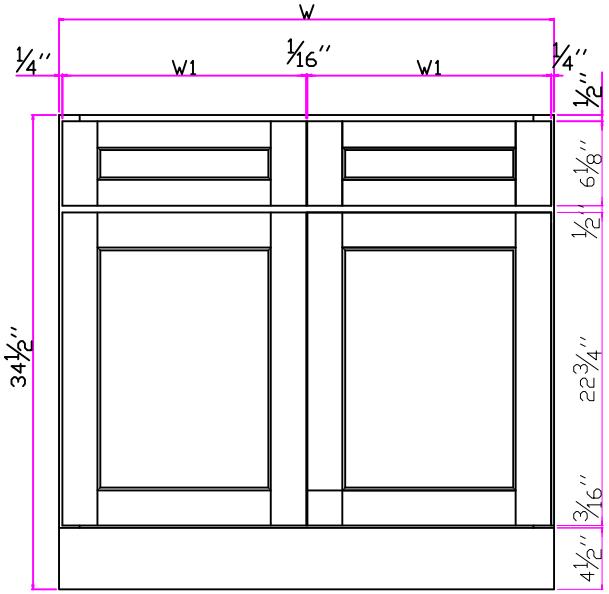

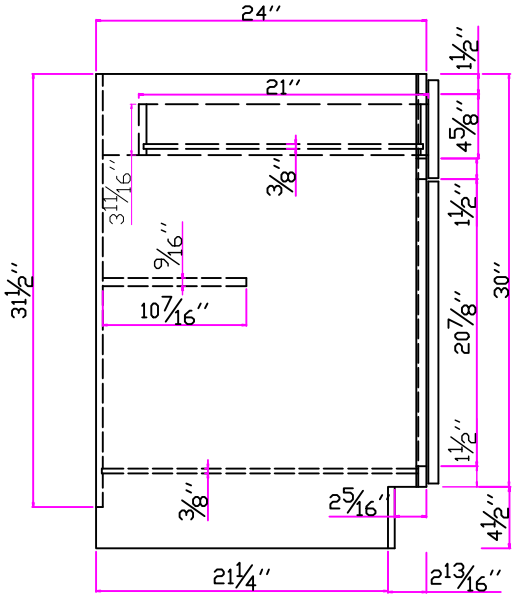

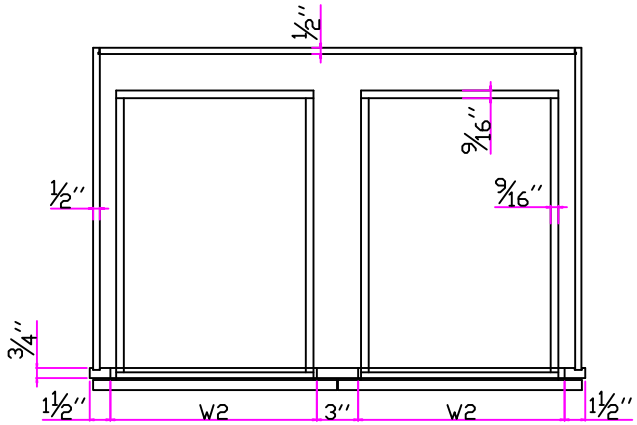

REVISIONS

GHI Custom Cabinetry

PCG

B33-B36

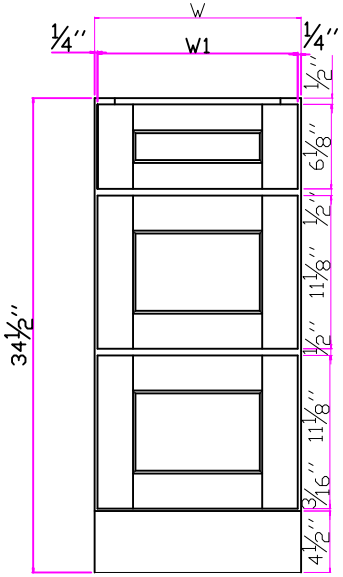

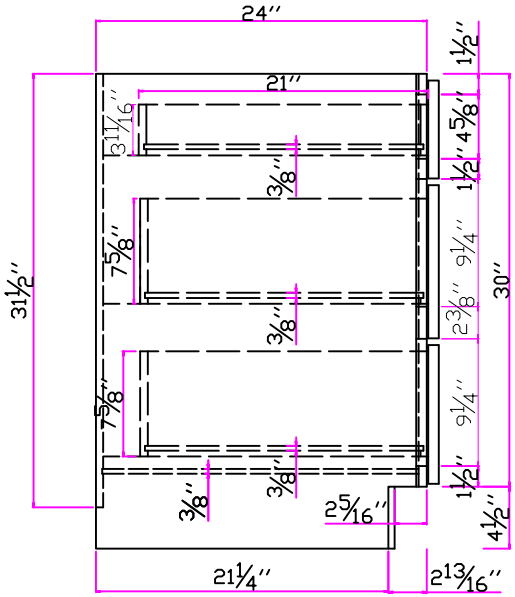

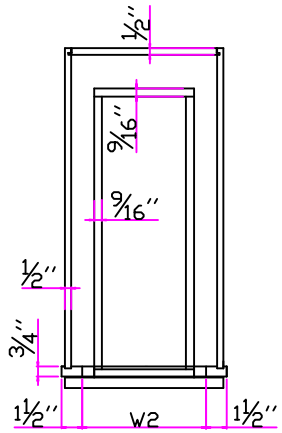

REVISIONS

GHI Custom Cabinetry

PCG

DB15-DB30

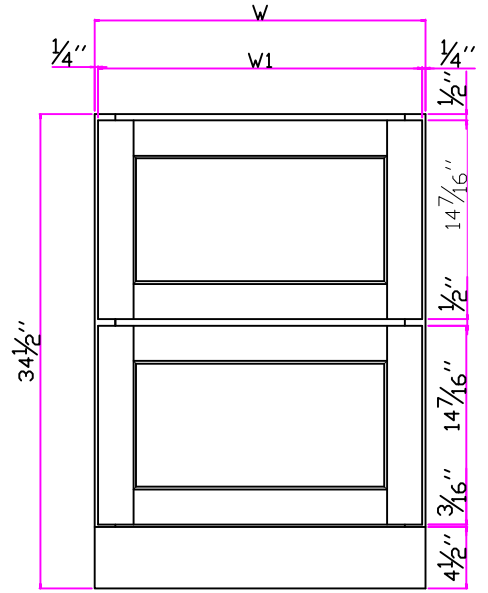

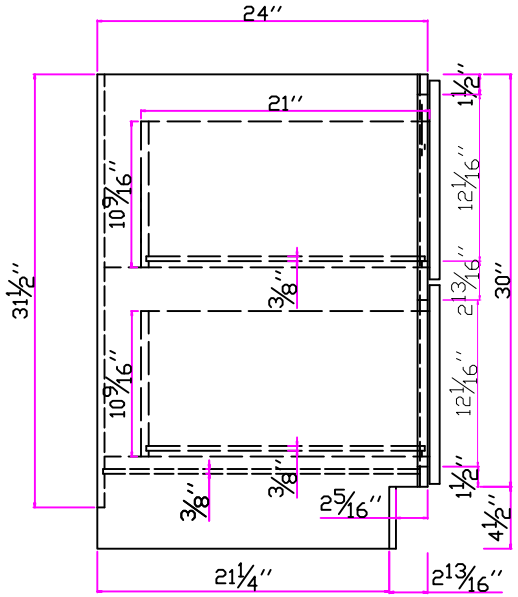

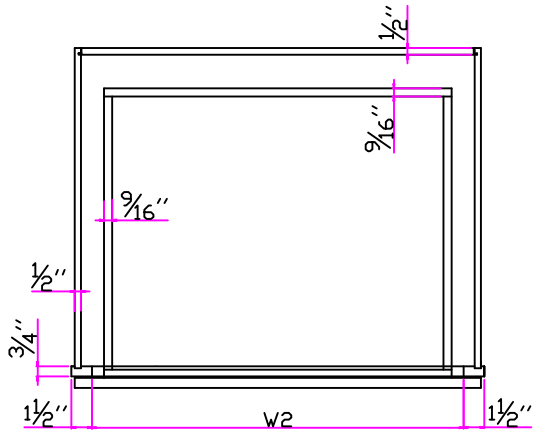

REVISIONS

GHI Custom Cabinetry

PCG

DB24-2
DB30-2

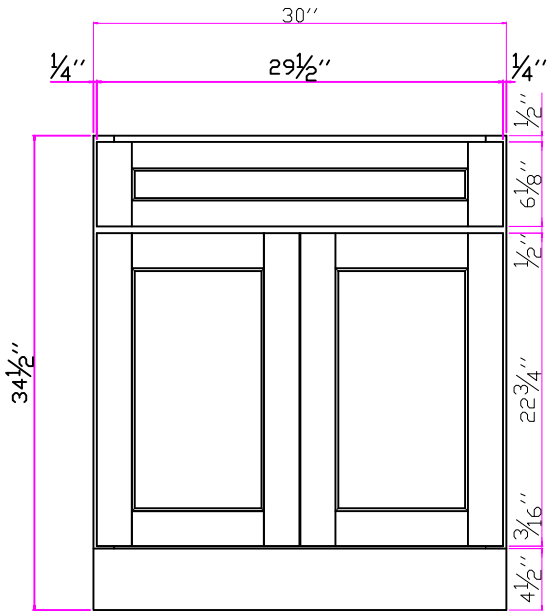

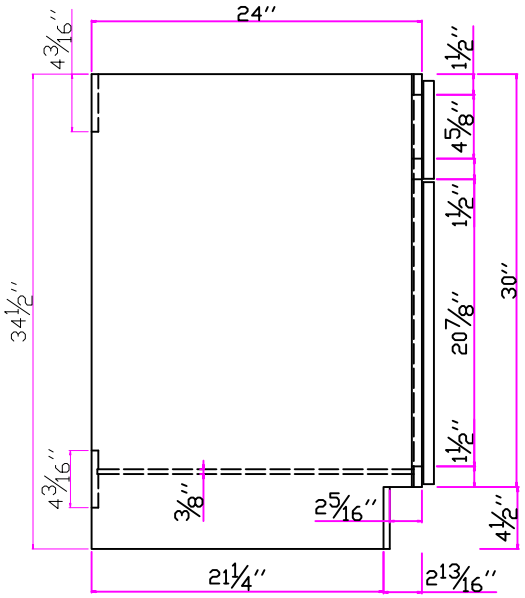

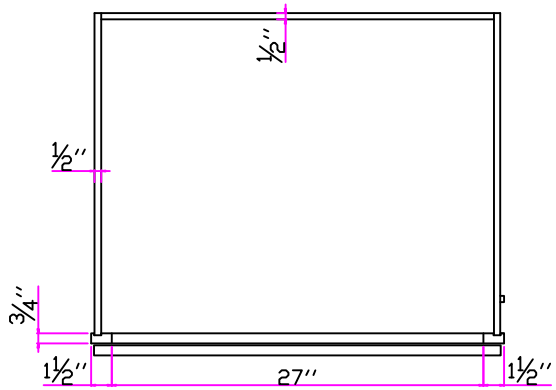

REVISIONS

GHI Custom Cabinetry

PCG

SB30

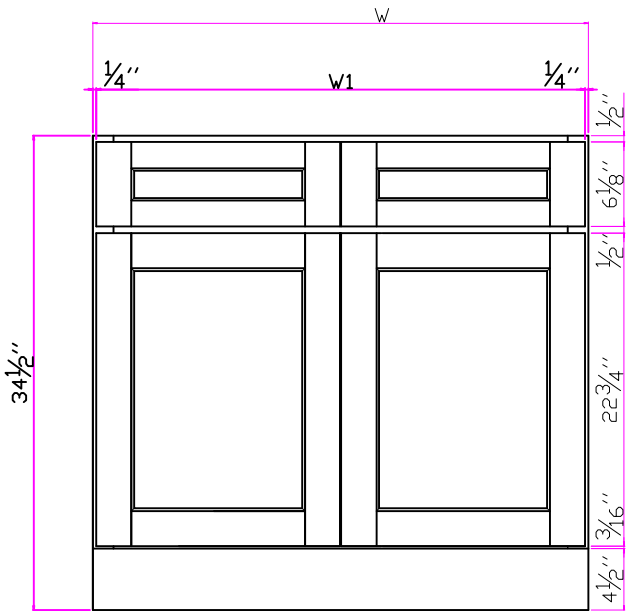

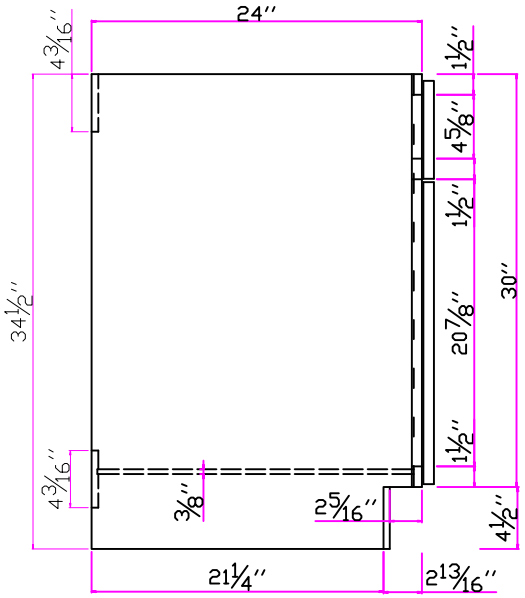

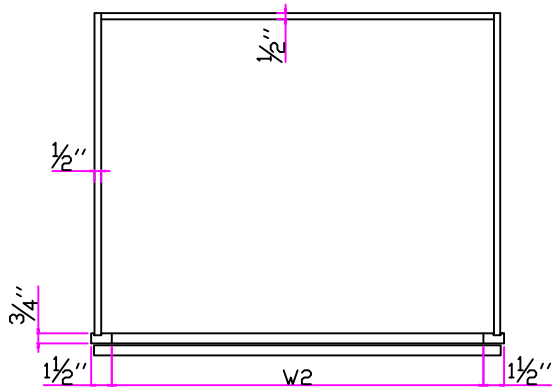

REVISIONS

GHI Custom Cabinetry

PCG

SB33-SB42

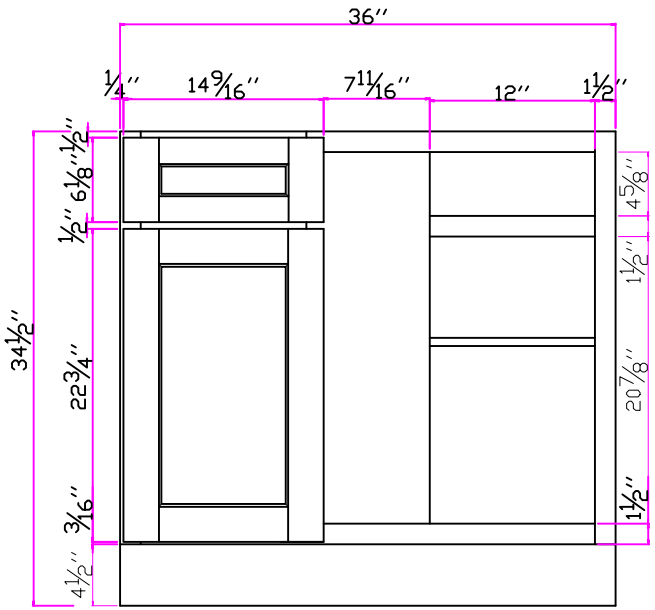

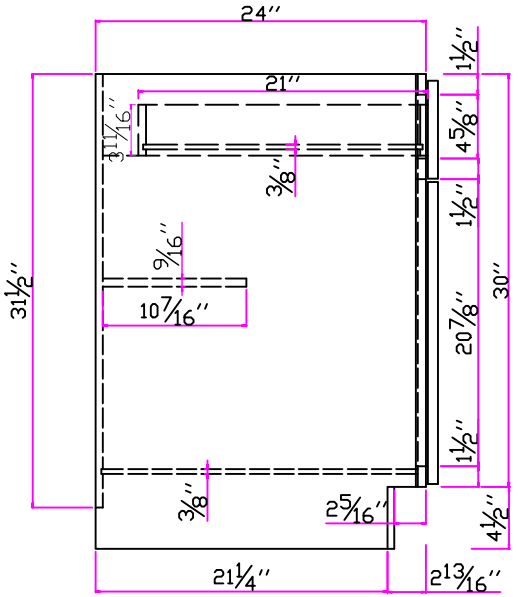

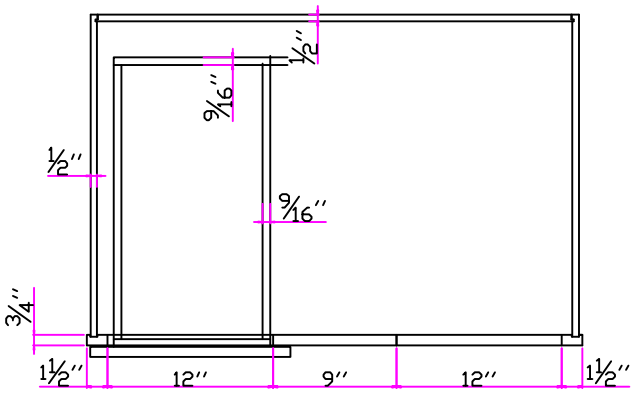

REVISIONS

GHI Custom Cabinetry

PCG

BBC42-45

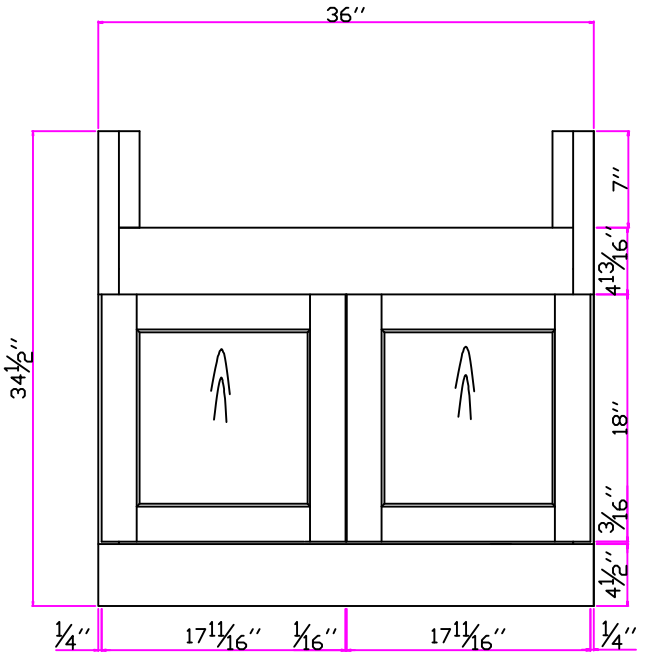

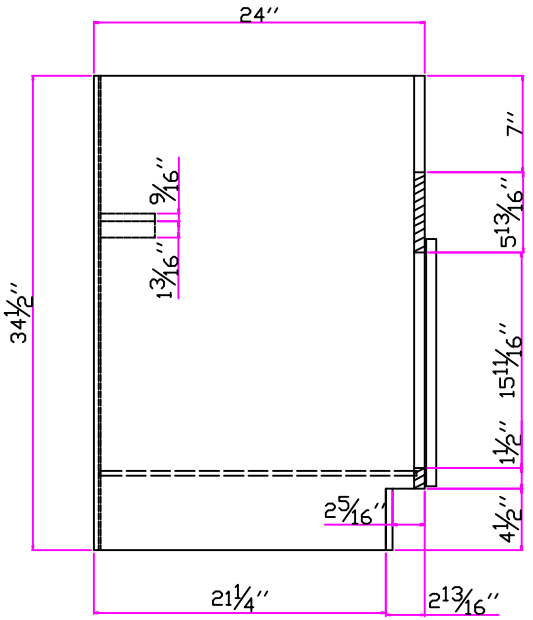

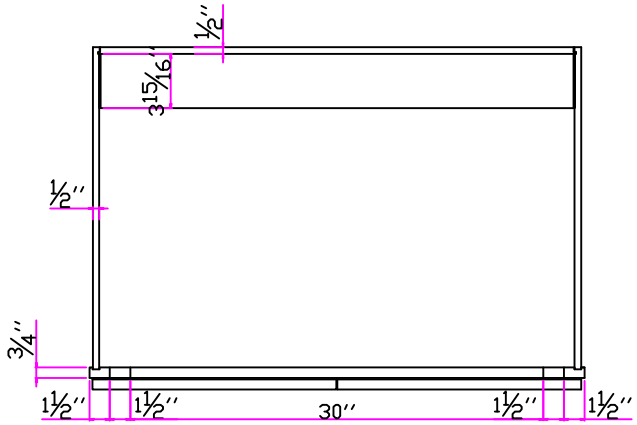

REVISIONS

PCG

FSB36

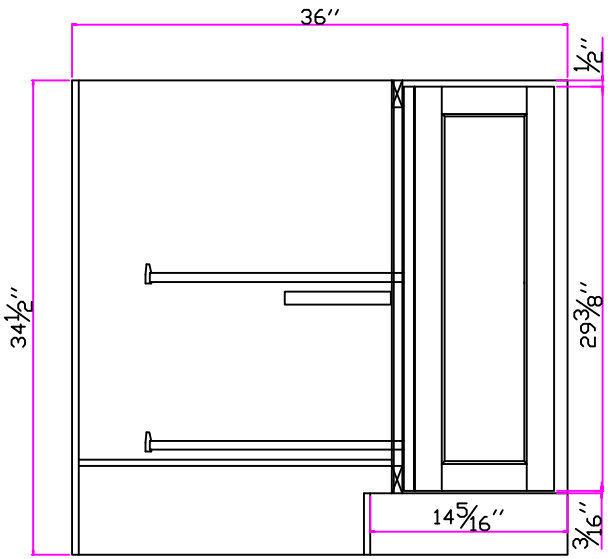

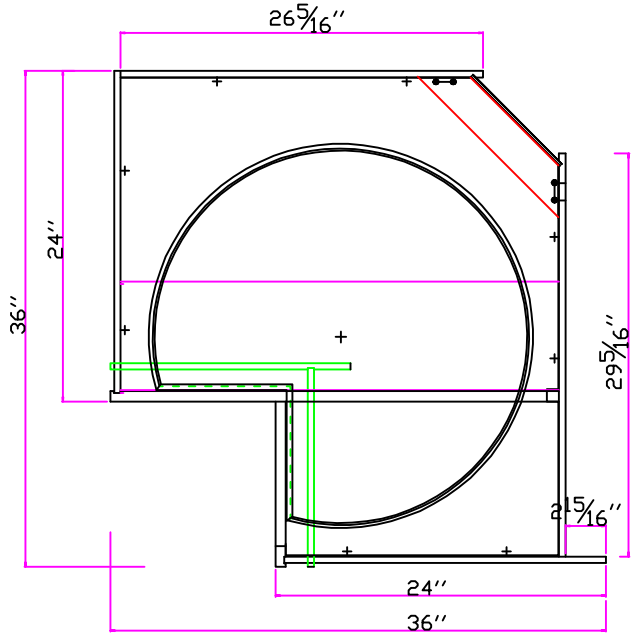

REVISIONS

GHI Custom Cabinetry

PCG

DCB3612

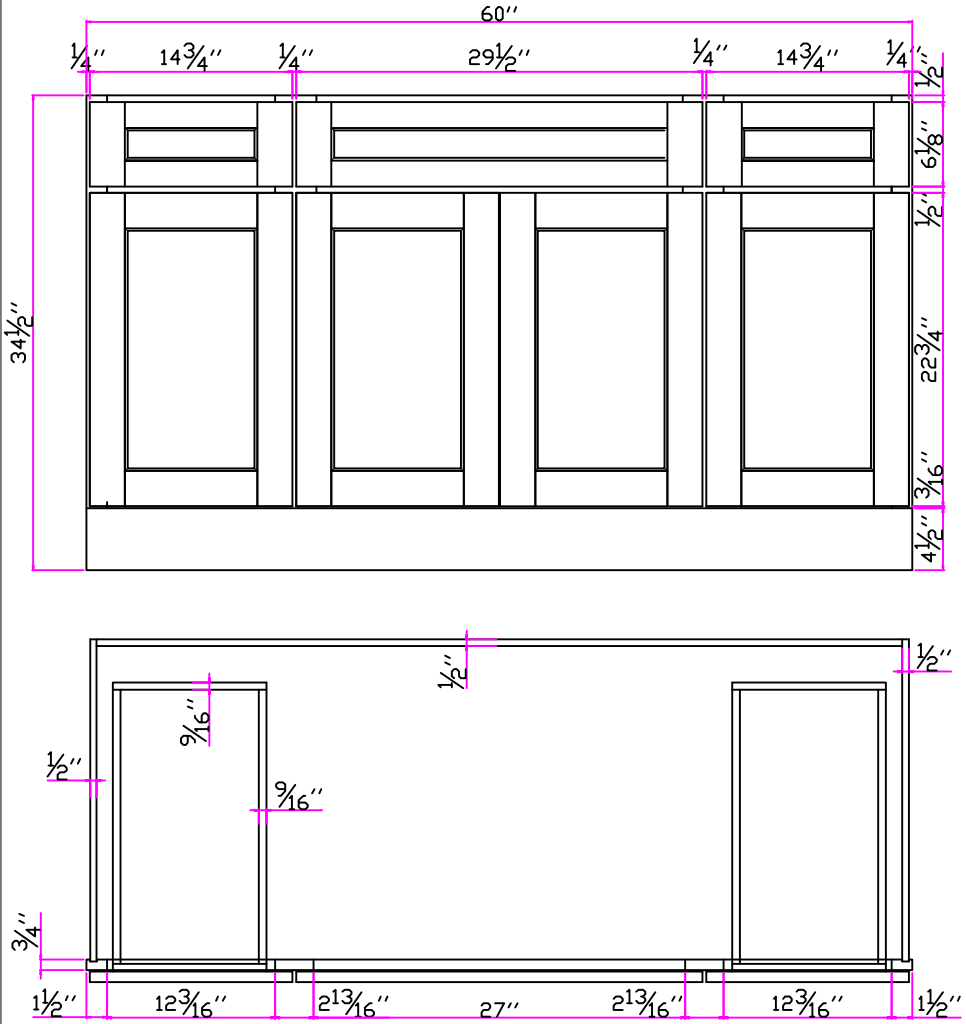

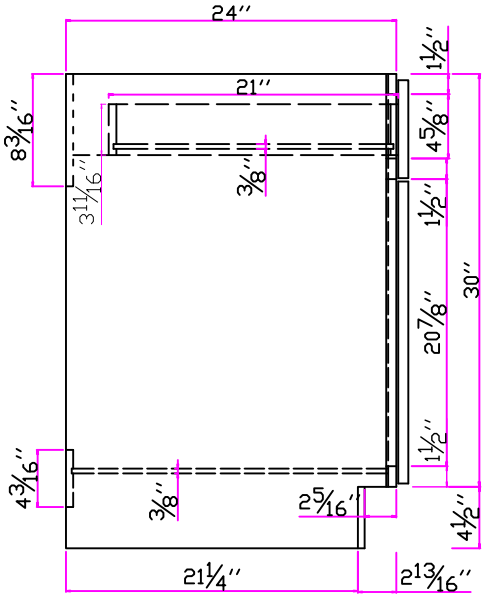

REVISIONS

GHI Custom Cabinetry

PCG

SB60

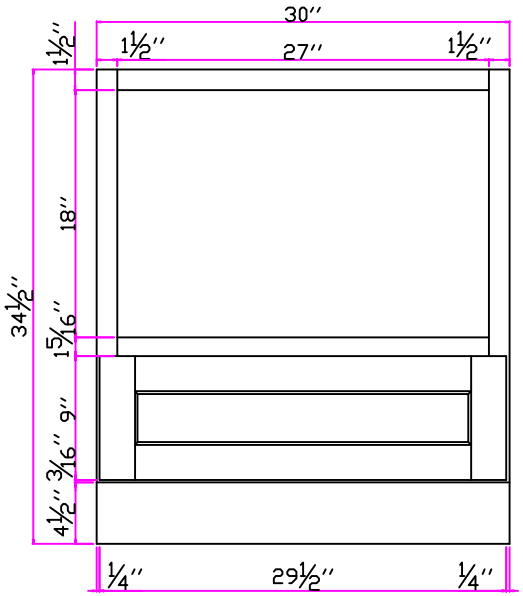

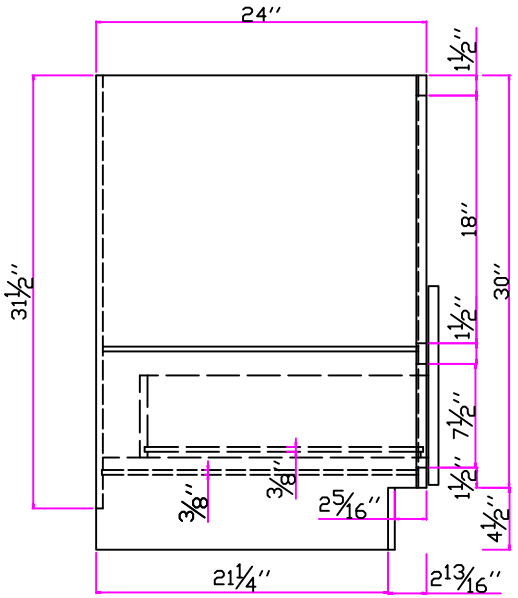

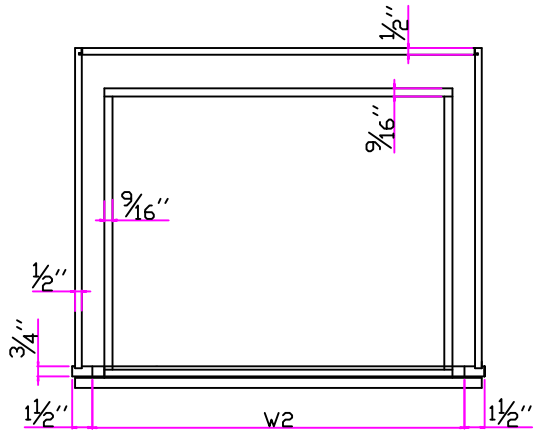

REVISIONS

GHI Custom Cabinetry

PCG

MB30

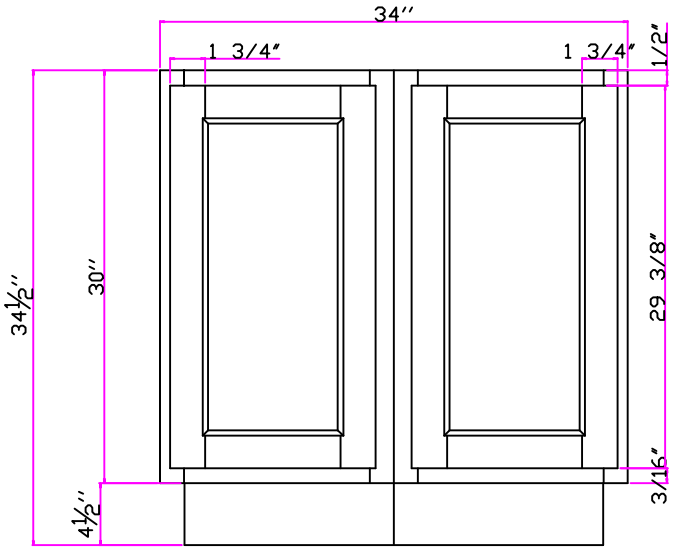

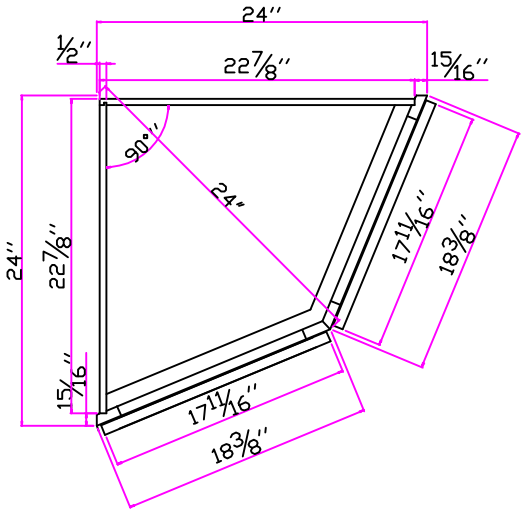

REVISIONS

GHI Custom Cabinetry

PCG

BC24

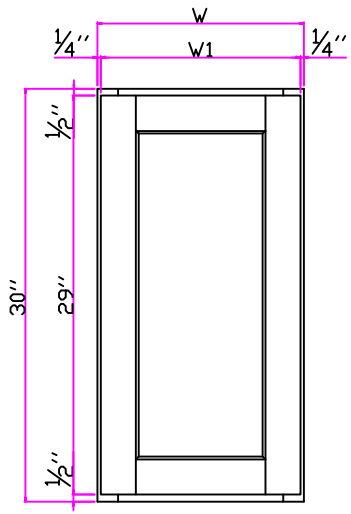

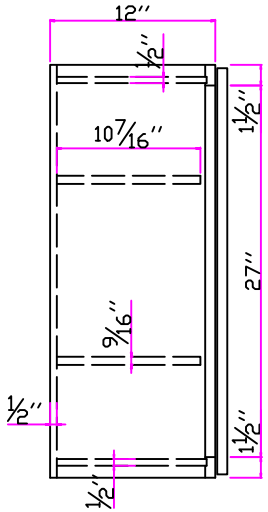

REVISIONS

GHI Custom Cabinetry

PCG

W0930-W2130

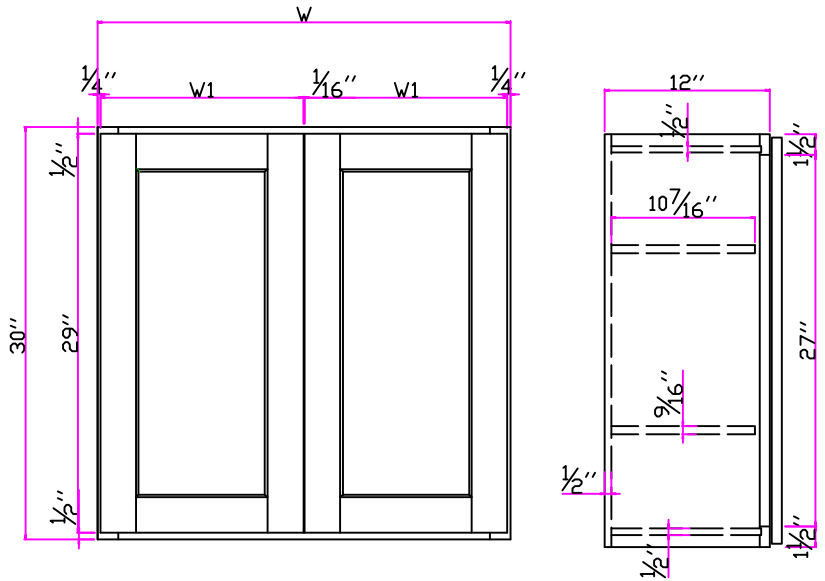

REVISIONS

GHI Custom Cabinetry

PCG

W2430-W3630

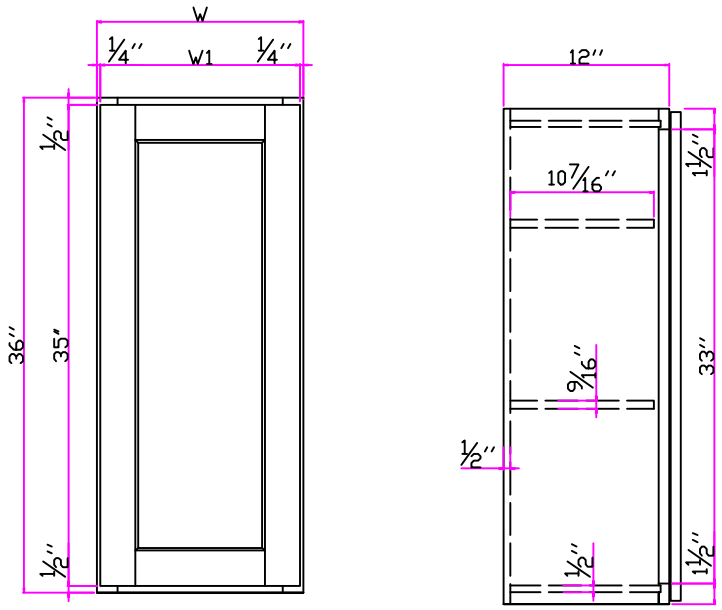

REVISIONS

GHI Custom Cabinetry

PCG

W0936-2136

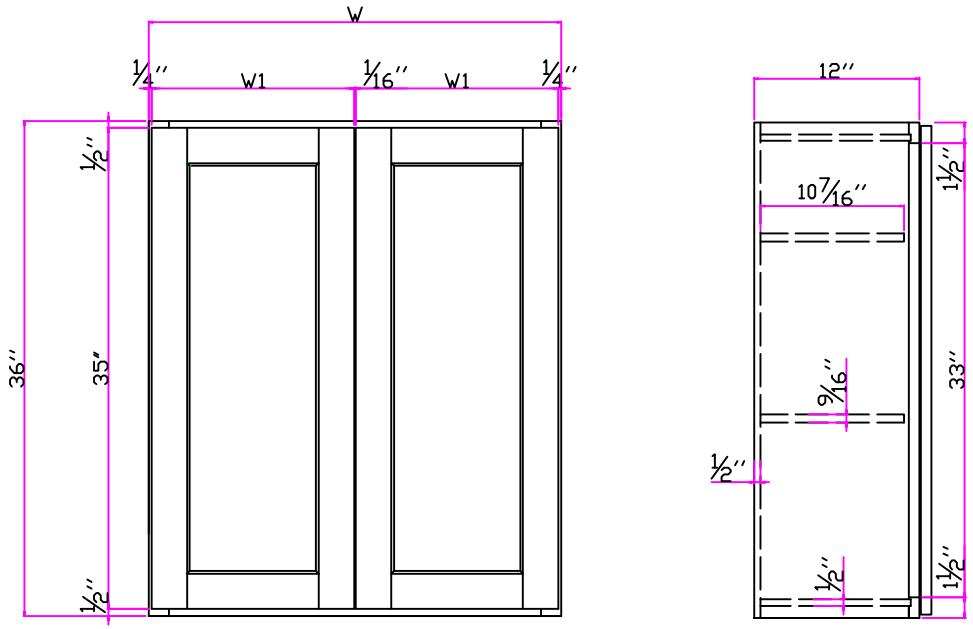

REVISIONS

GHI Custom Cabinetry

PCG

W2436-W3636

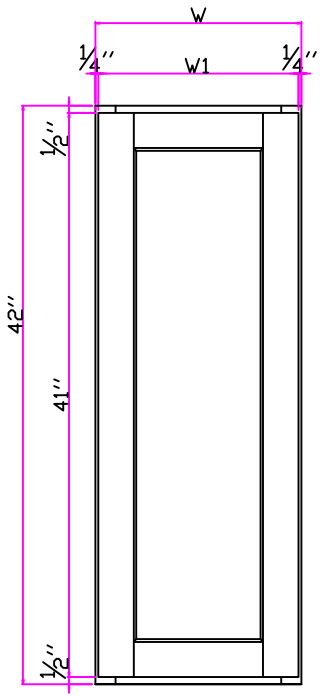

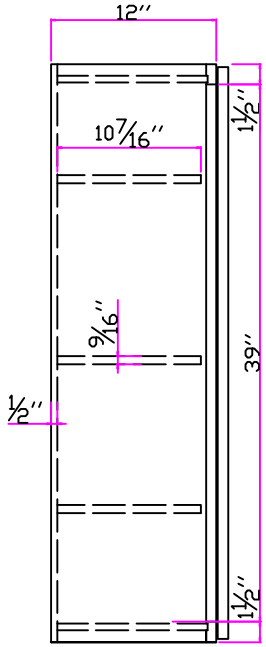

REVISIONS

GHI Custom Cabinetry

PCG

W0942-W2142

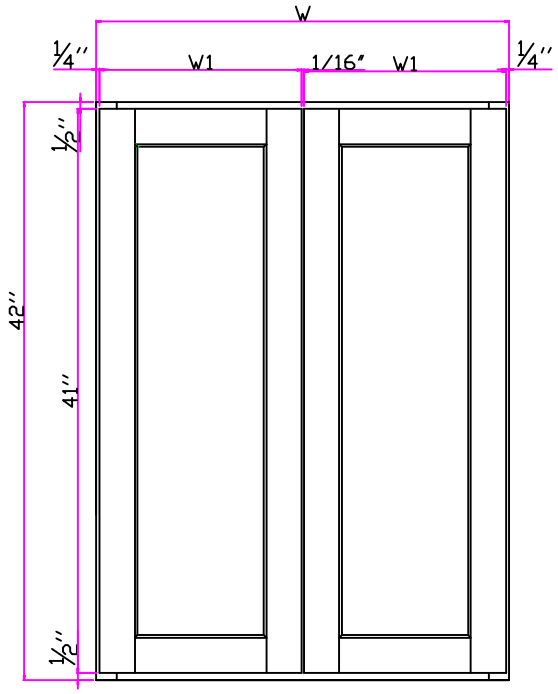

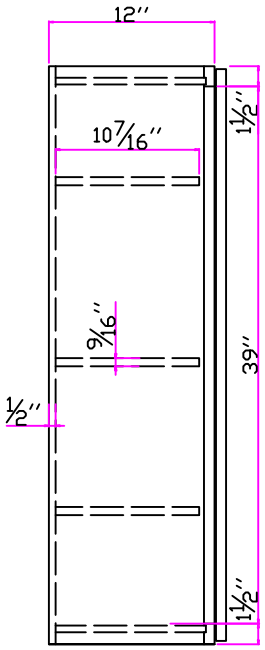

REVISIONS

GHI Custom Cabinetry

PCG

W2442-W3642

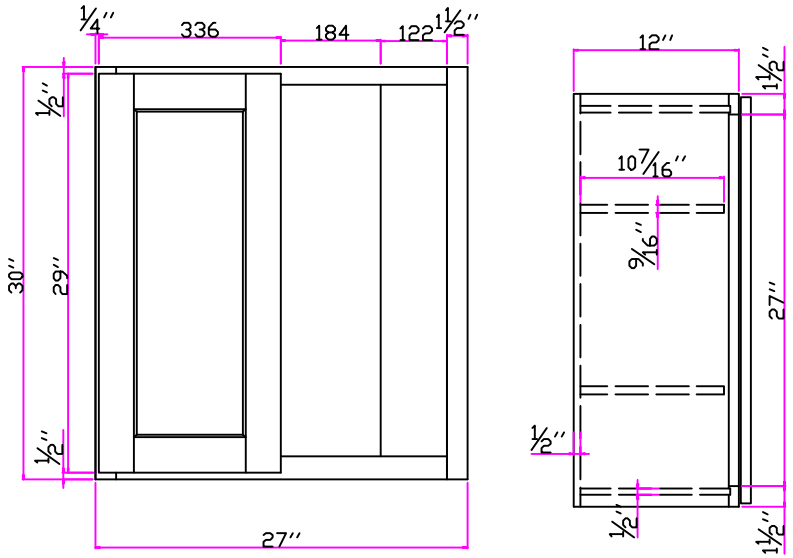

REVISIONS

GHI Custom Cabinetry

PCG

WBC2730

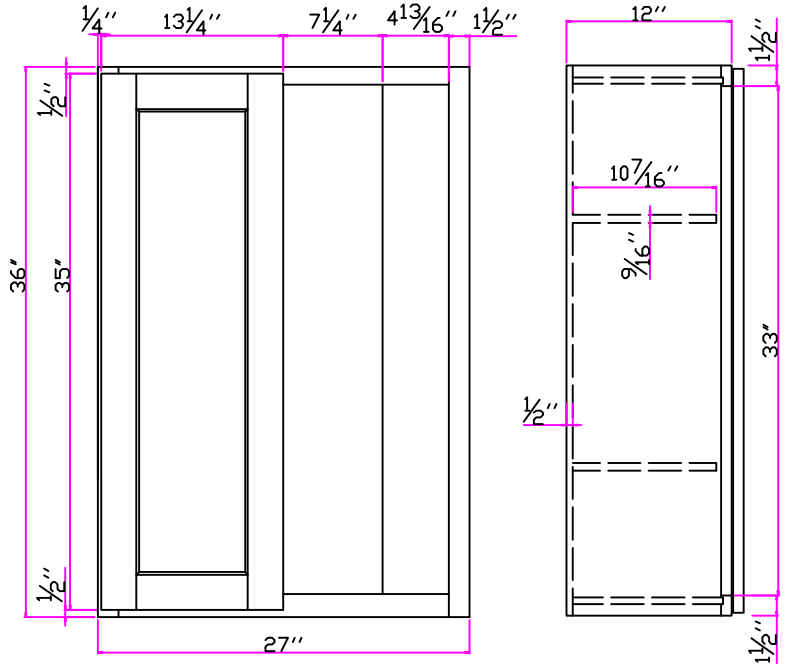

REVISIONS

GHI Custom Cabinetry

PCG

WBC2736

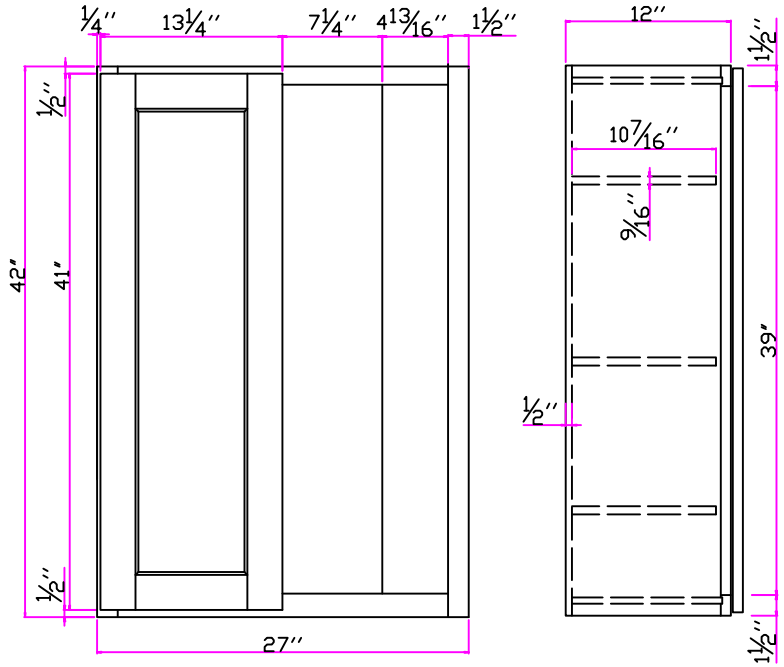

REVISIONS

GHI Custom Cabinetry

PCG

WBC2742

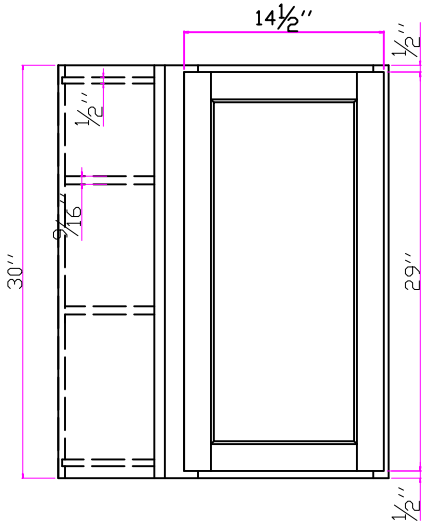

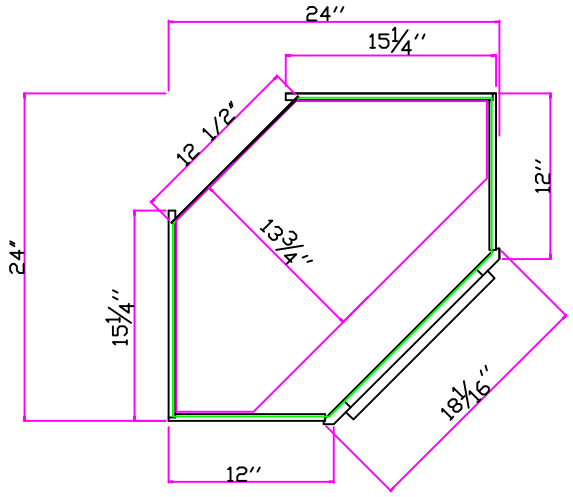

REVISIONS

GHI Custom Cabinetry

PCG

WDC2430

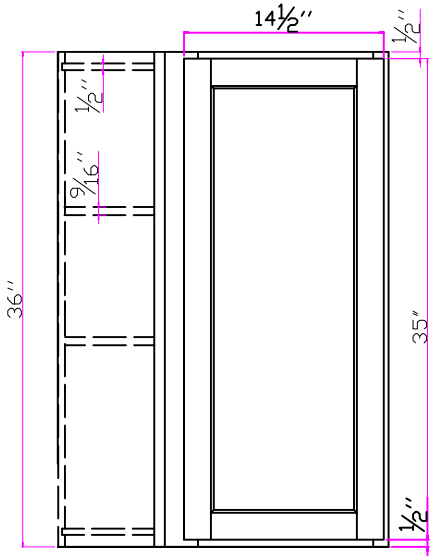

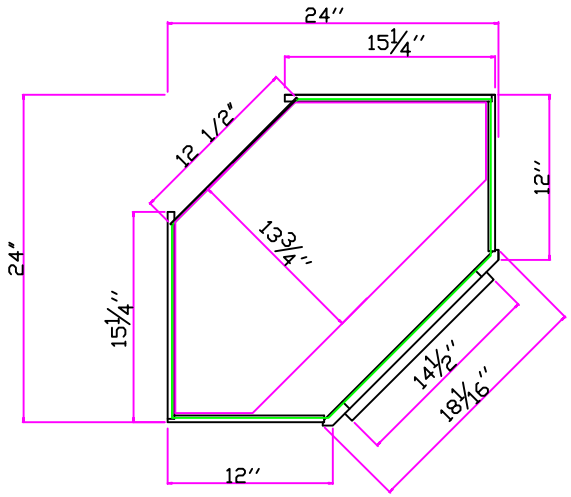

REVISIONS

GHI Custom Cabinetry

PCG

WDC2436

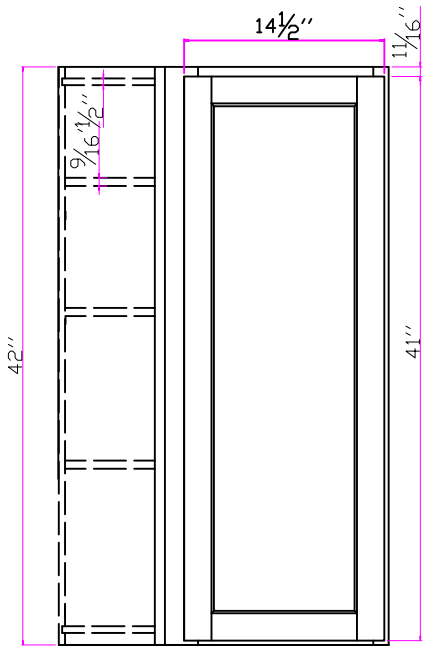

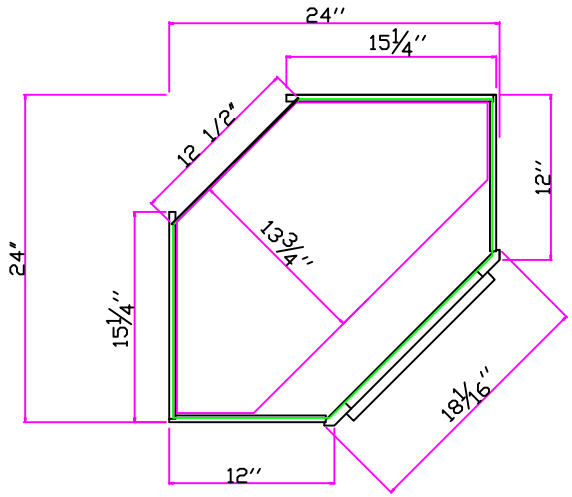

REVISIONS

GHI Custom Cabinetry

PCG

WDC2442

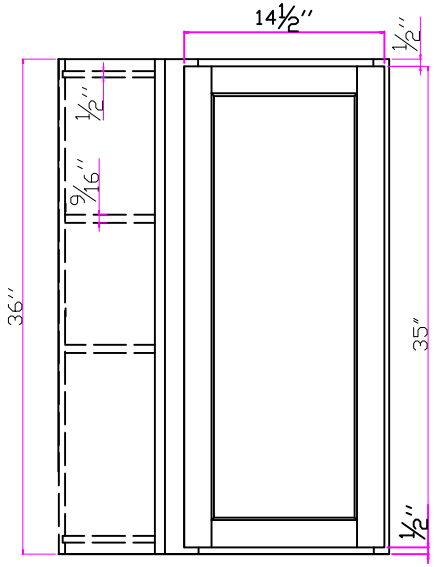

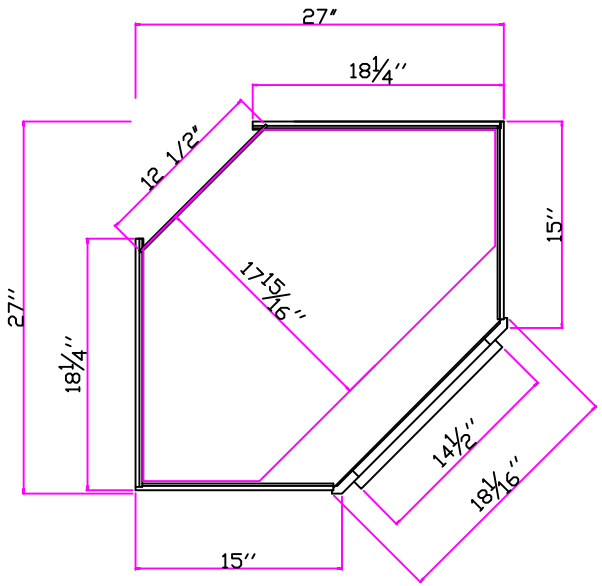

REVISIONS

GHI Custom Cabinetry

PCG

WDC2736

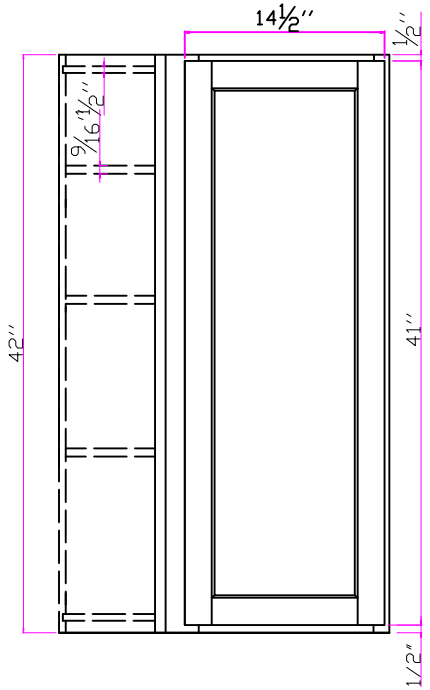

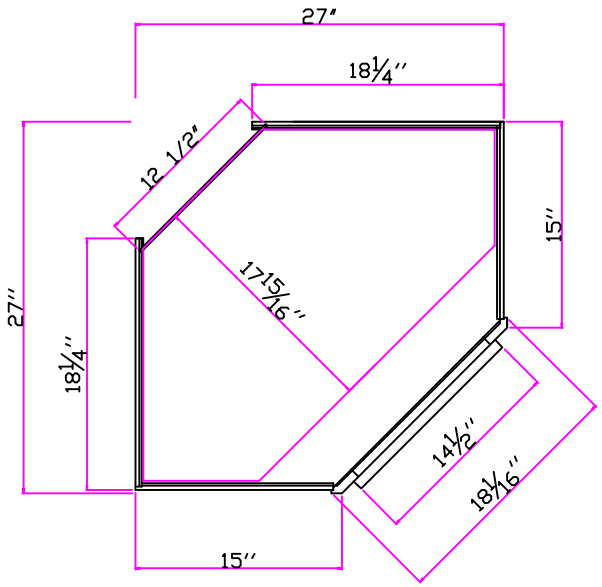

REVISIONS

GHI Custom Cabinetry

PCG

WDC2742

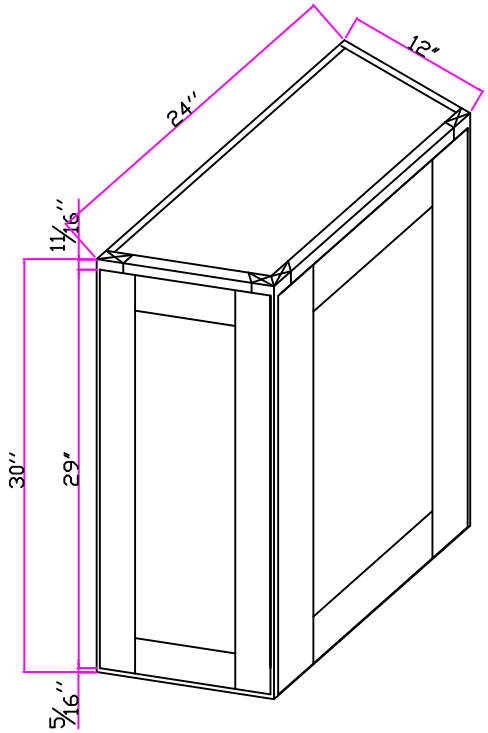

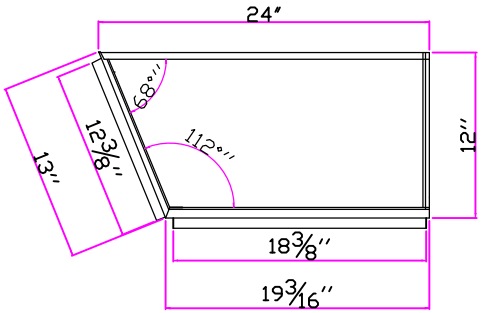

REVISIONS

GHI Custom Cabinetry

PCG

WAC2430

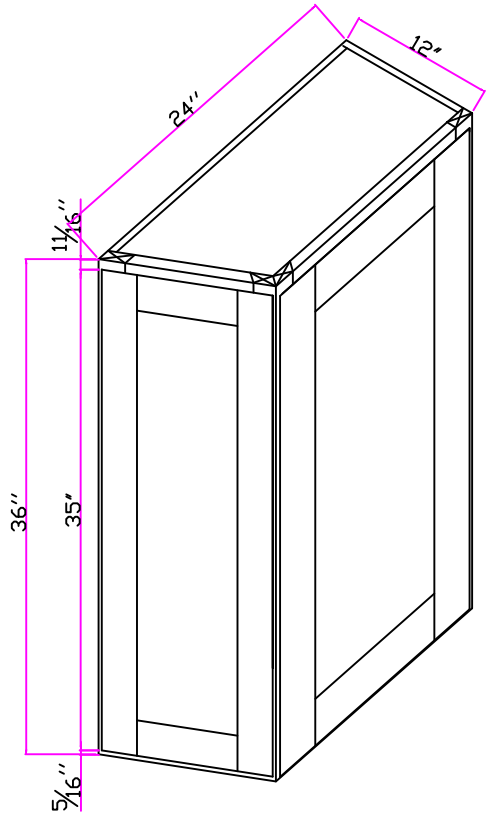

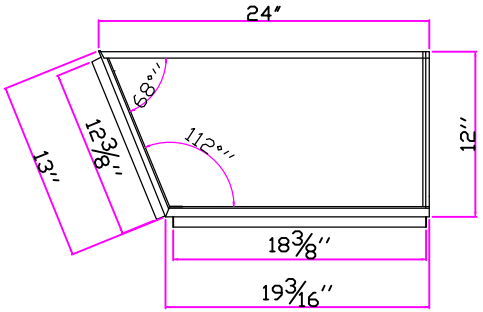

REVISIONS

PCG

WAC2436

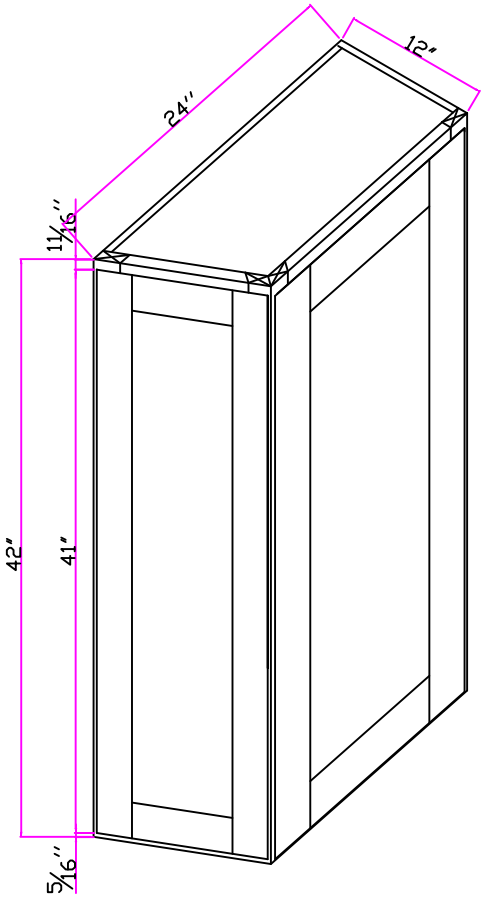

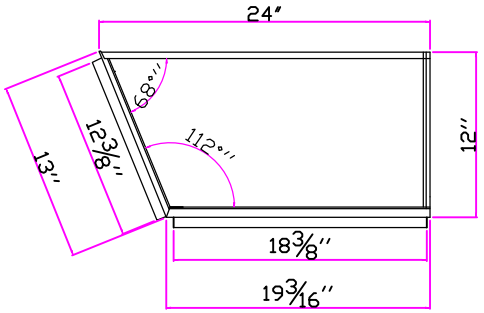

REVISIONS

GHI Custom Cabinetry

PCG

WAC2442

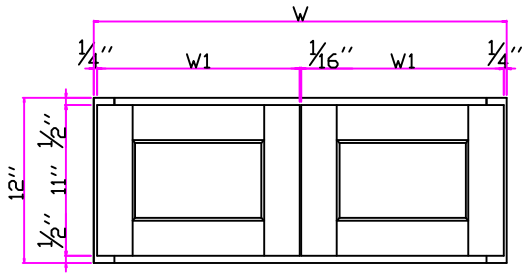

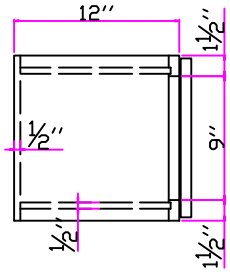

REVISIONS

GHI Custom Cabinetry

PCG

W3012-W3612

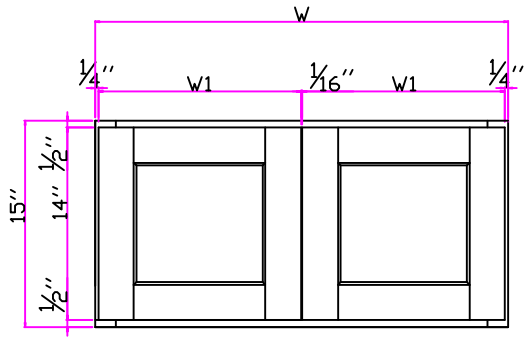

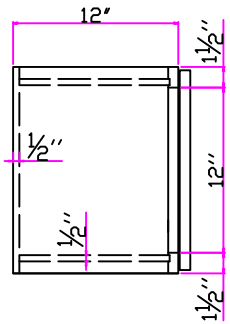

REVISIONS

GHI Custom Cabinetry

PCG

W2415-W3615

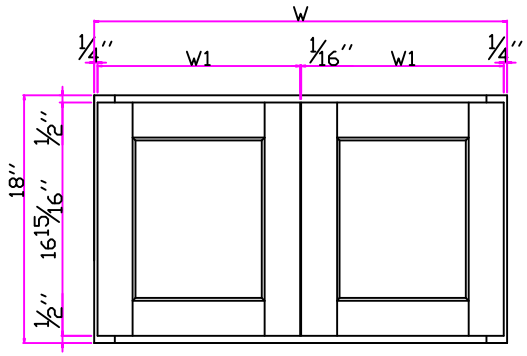

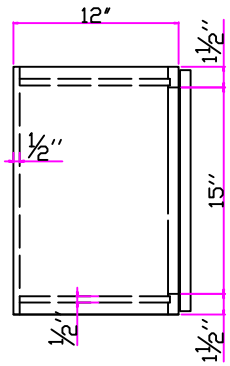

REVISIONS

GHI Custom Cabinetry

PCG

W3018-W3618

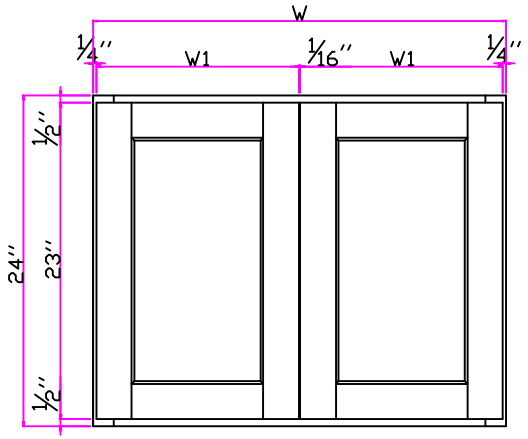

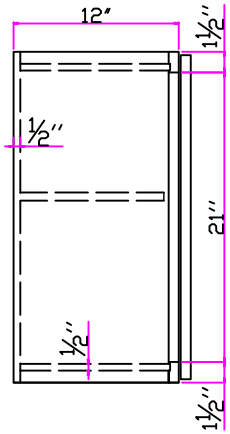

REVISIONS

GHI Custom Cabinetry

PCG

W3024-W3624

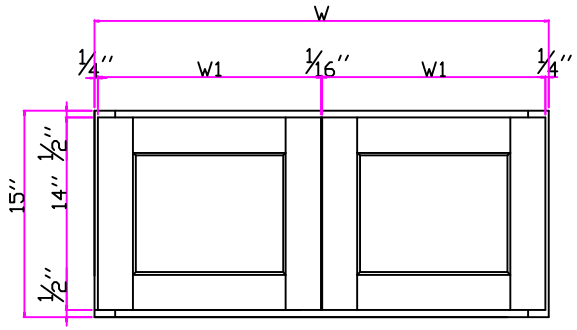

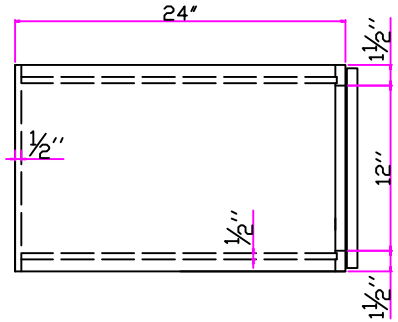

REVISIONS

PCG

W331524
W361524

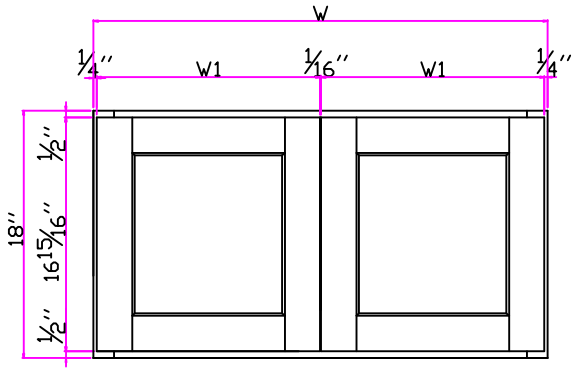

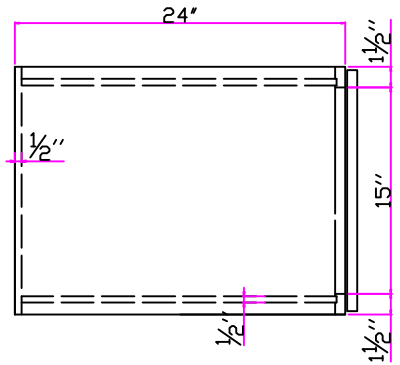

REVISIONS

GHI Custom Cabinetry

PCG

W331824
W361824

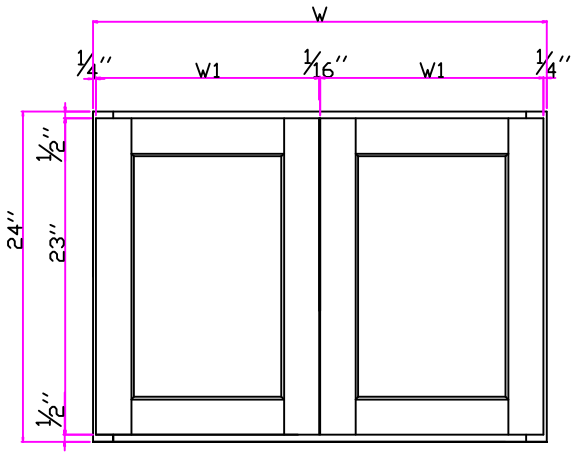

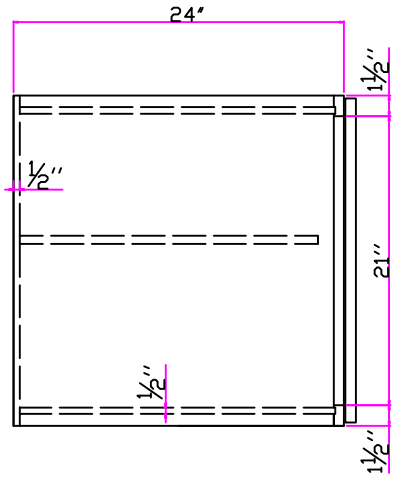

REVISIONS

GHI Custom Cabinetry

PCG

W332424
W362424

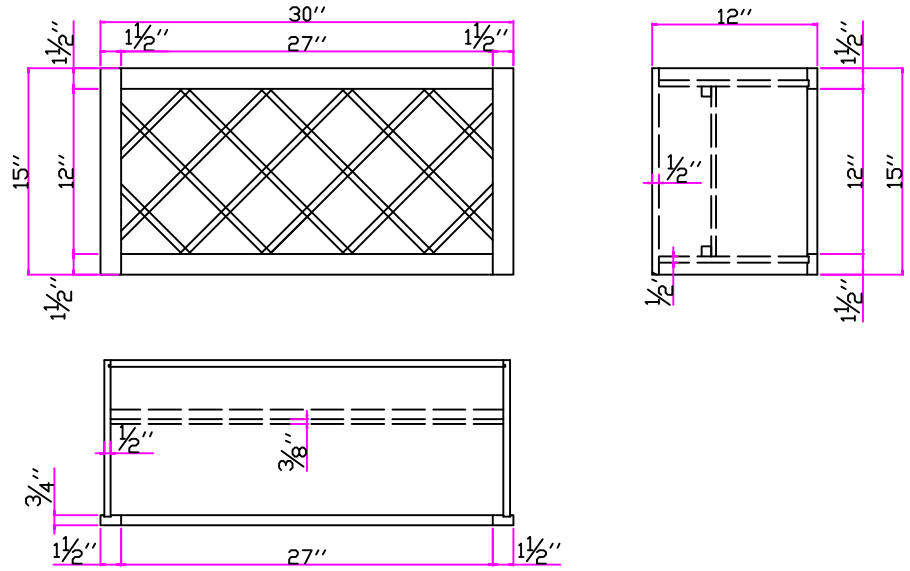

REVISIONS

GHI Custom Cabinetry

PCG

WR3015

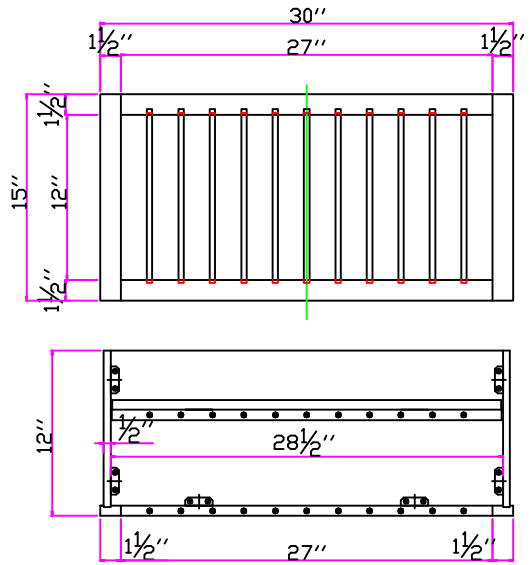

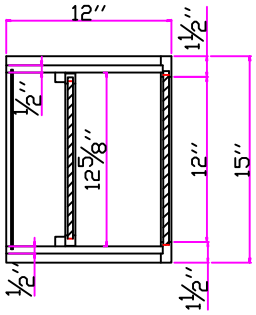

REVISIONS

GHI Custom Cabinetry

PCG

PR3015

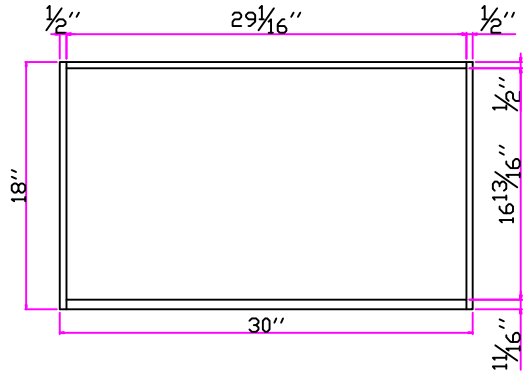

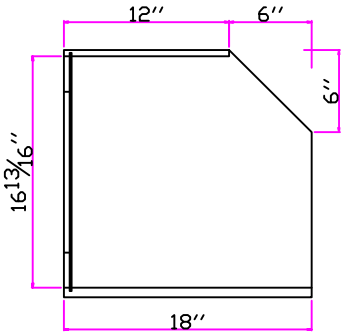

REVISIONS

GHI Custom Cabinetry

PCG

MC3018

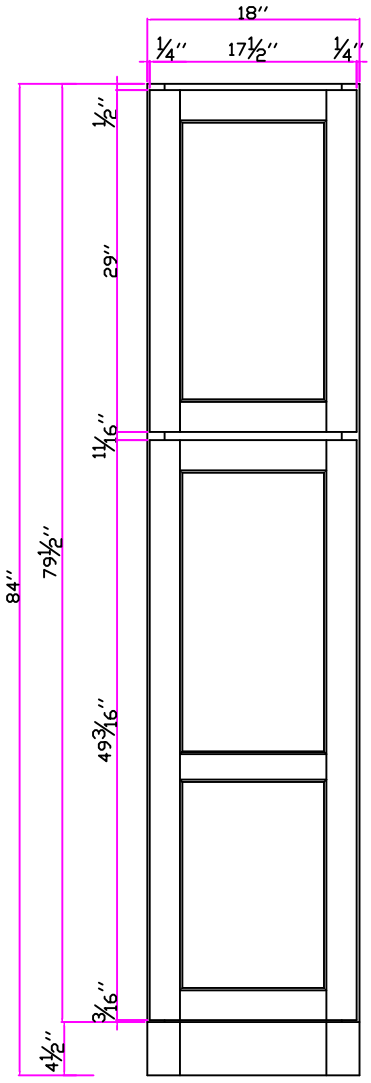

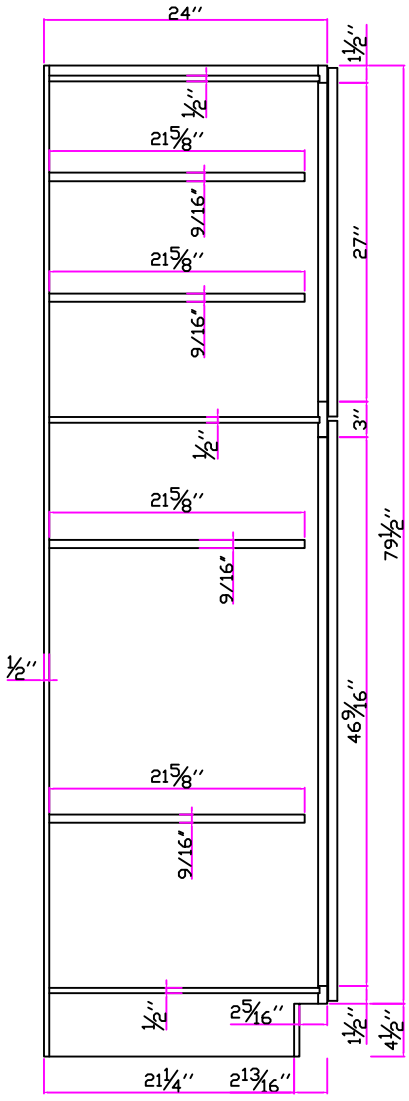

GHI Custom Cabinetry		PCG		WP1884

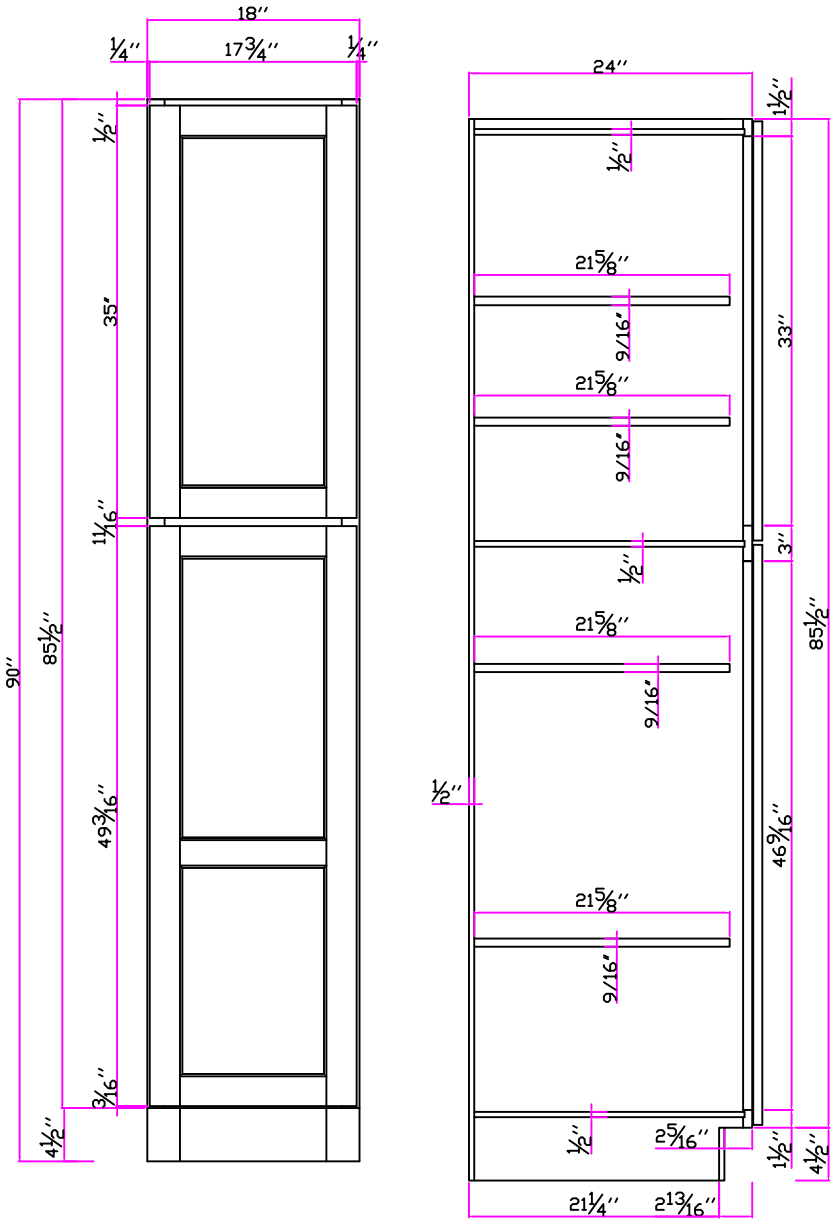

GHI Custom Cabinetry

PCG

WP1890

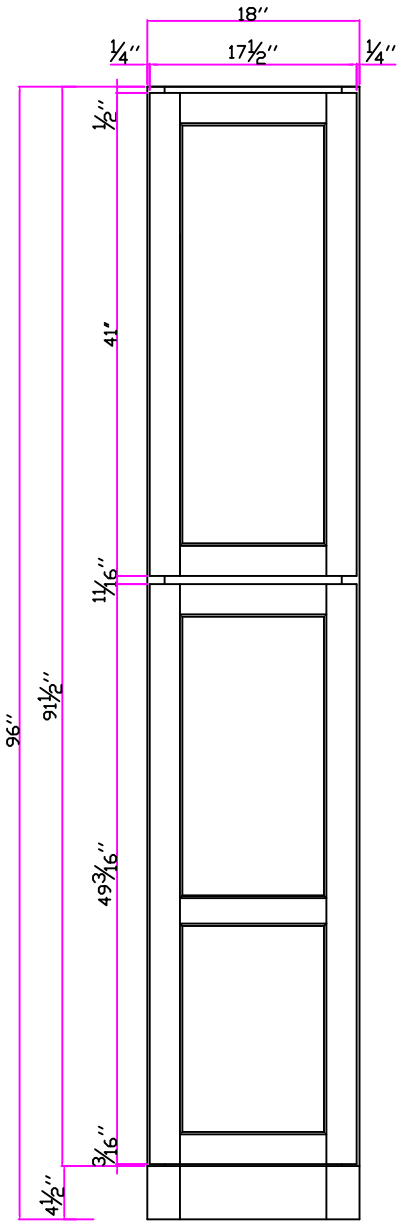

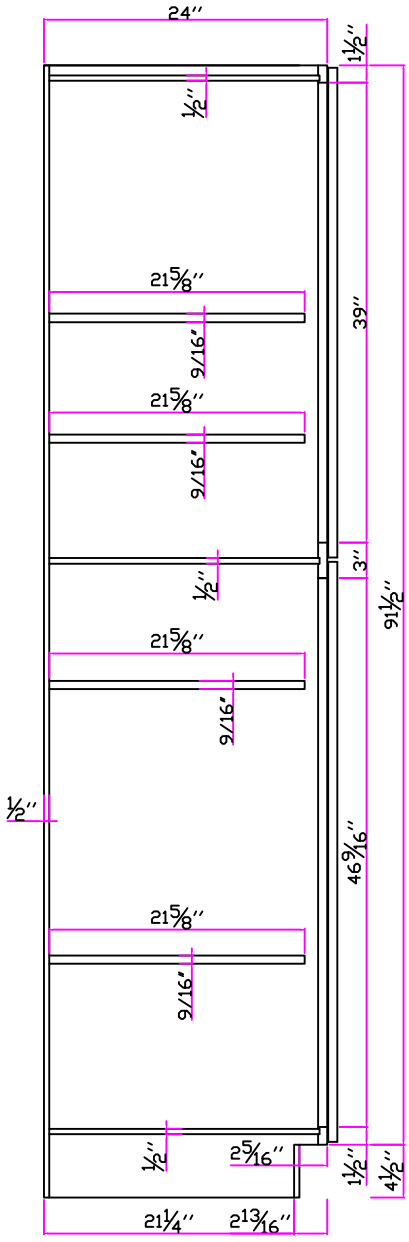

GHI Custom Cabinetry

PCG

WP1896

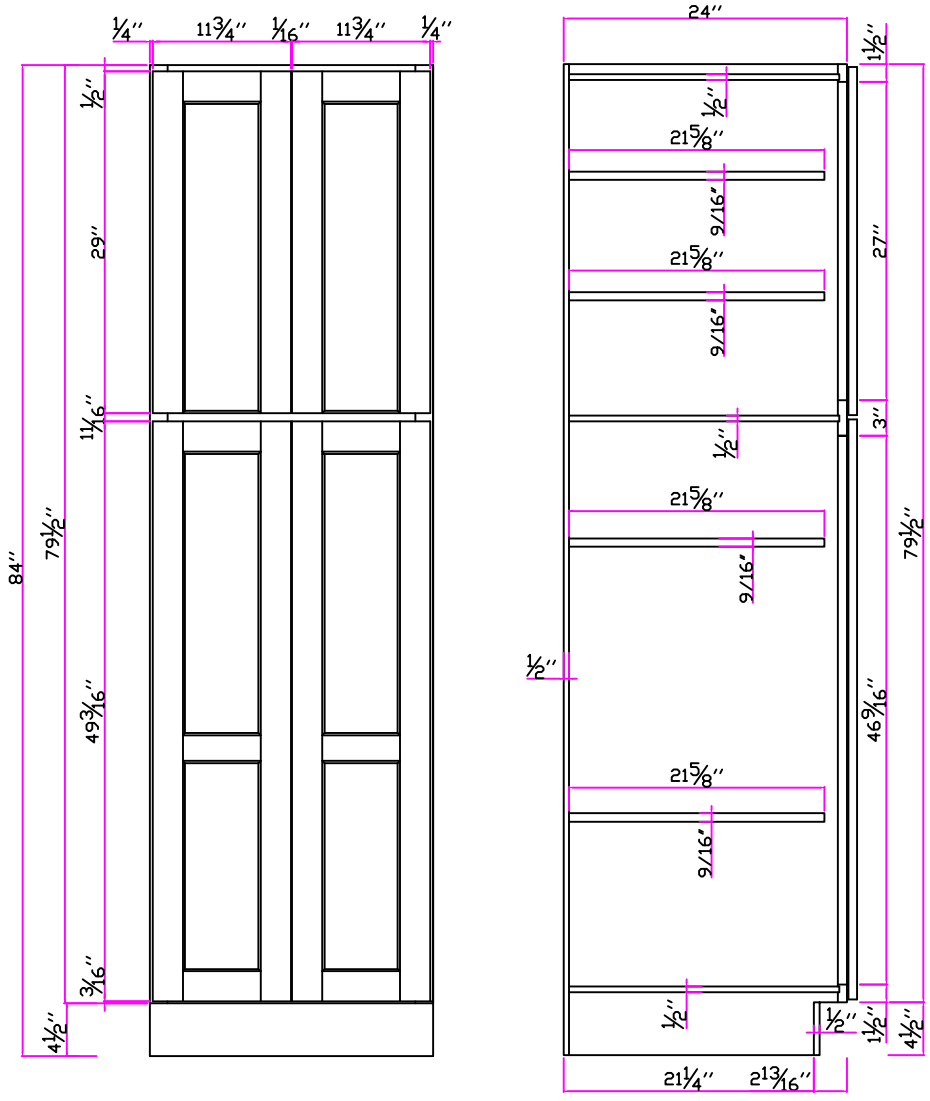

GHI Custom Cabinetry

PCG

WP2484

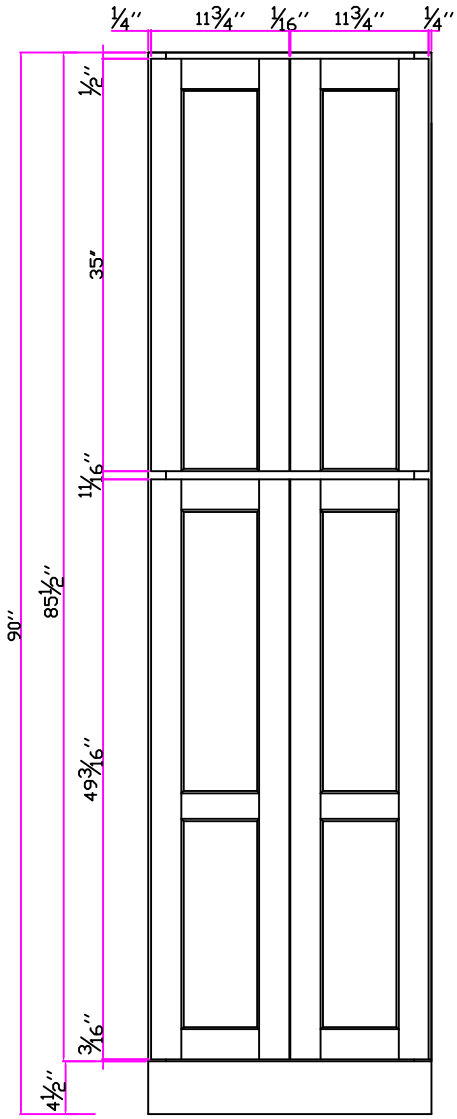

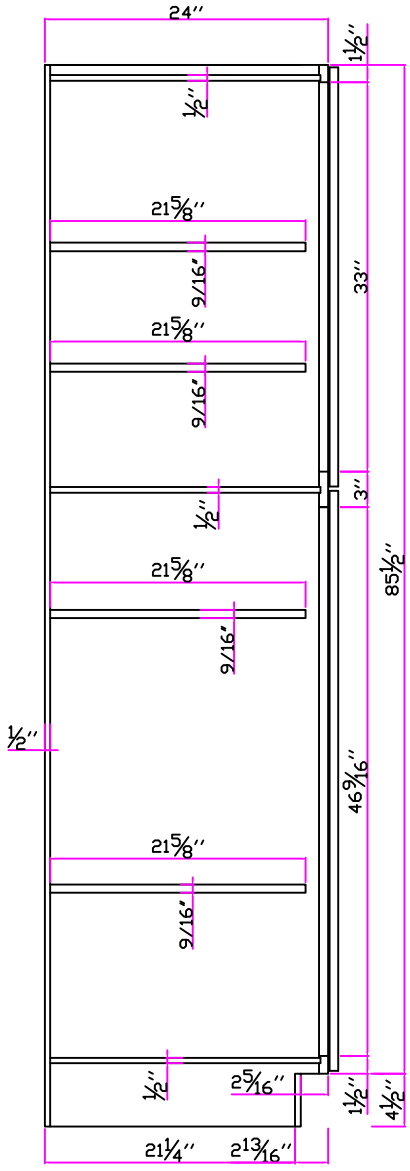

GHI Custom Cabinetry		PCG	WP2490

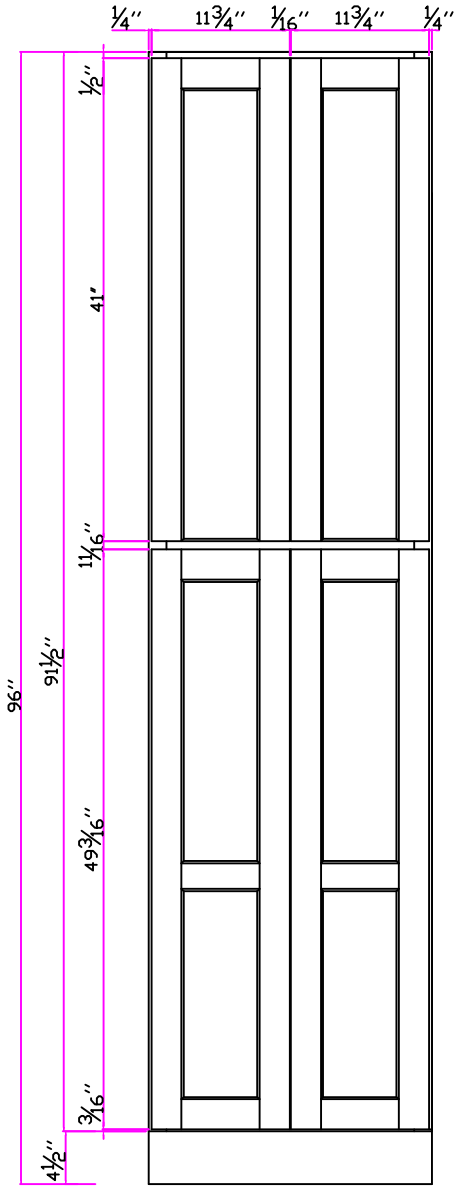

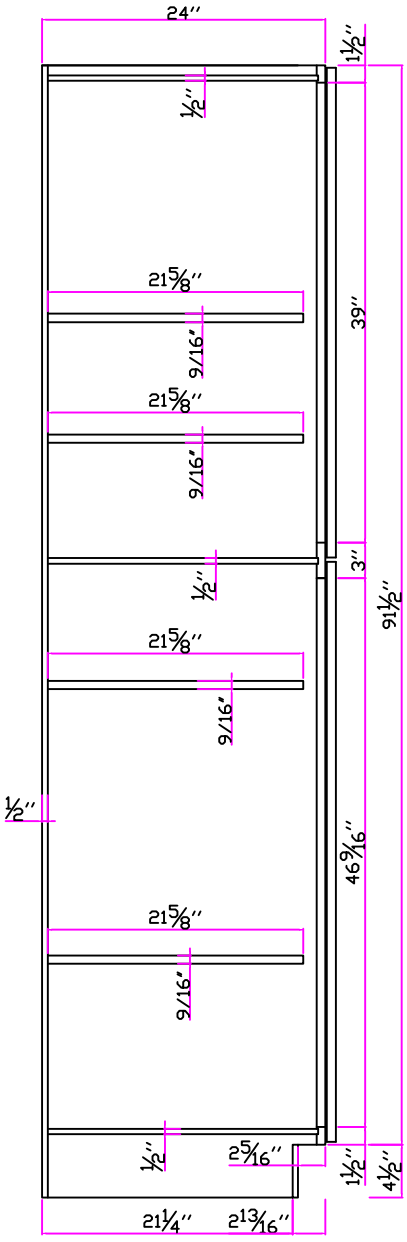

GHI Custom Cabinetry

PCG

WP2496

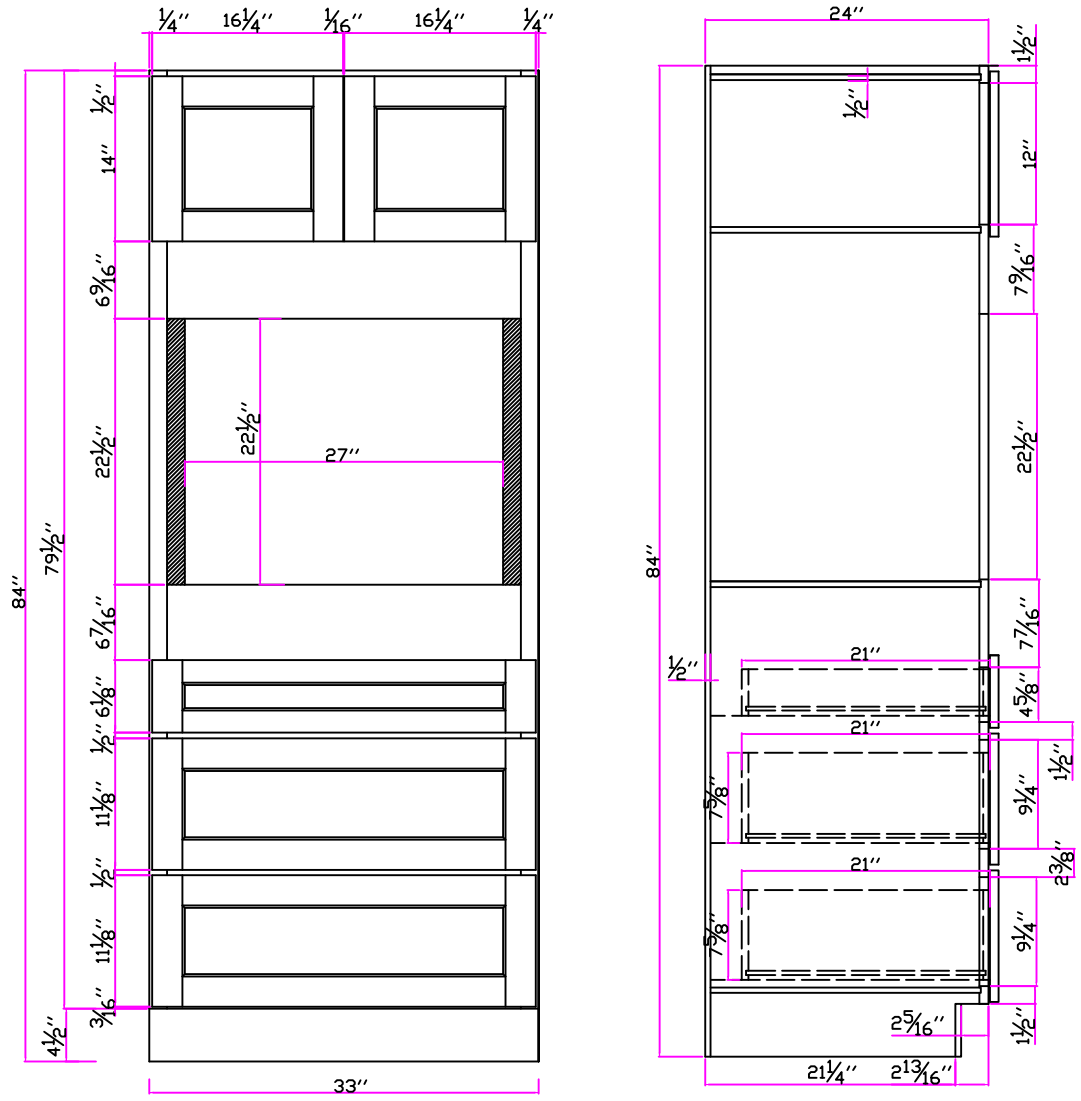

GHI Custom Cabinetry		PCG		OU332484

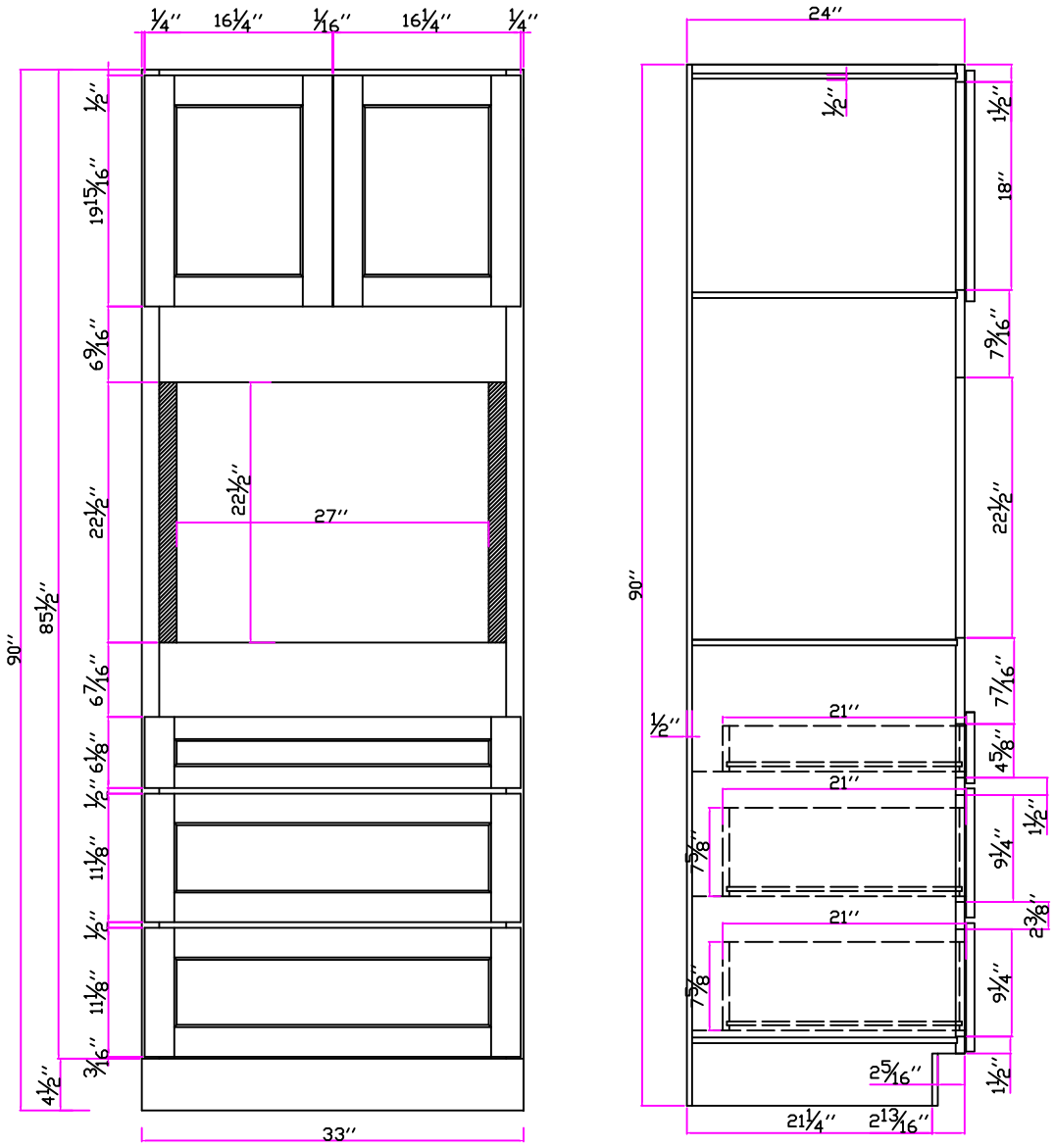

GHI Custom Cabinetry		PCG	OU332490